LineLazer™ V 200HS & 200DC Airless Line Stripers

Standard Series and High Production (HP) Series

3A3426J

EN

For the application of line striping materials.
For professional use only.
For outdoor use only.
Not for use in explosive atmospheres or hazardous locations.

Maximum Operating Pressure: 3300 psi (22.8 MPa, 228 bar)

Important Safety Instructions

Read all warnings and instructions in this manual and in related manuals before using the equipment.
Be familiar with the controls and the proper usage of the equipment.
Save these instructions.

Related Manuals:					
3A3390	Parts	309277	Pump	3B0122	Gallon Counter Replacement
311254	Gun	3A3428	Auto-Layout Applications Methods		

LineLazer V 200HS
Standard Series

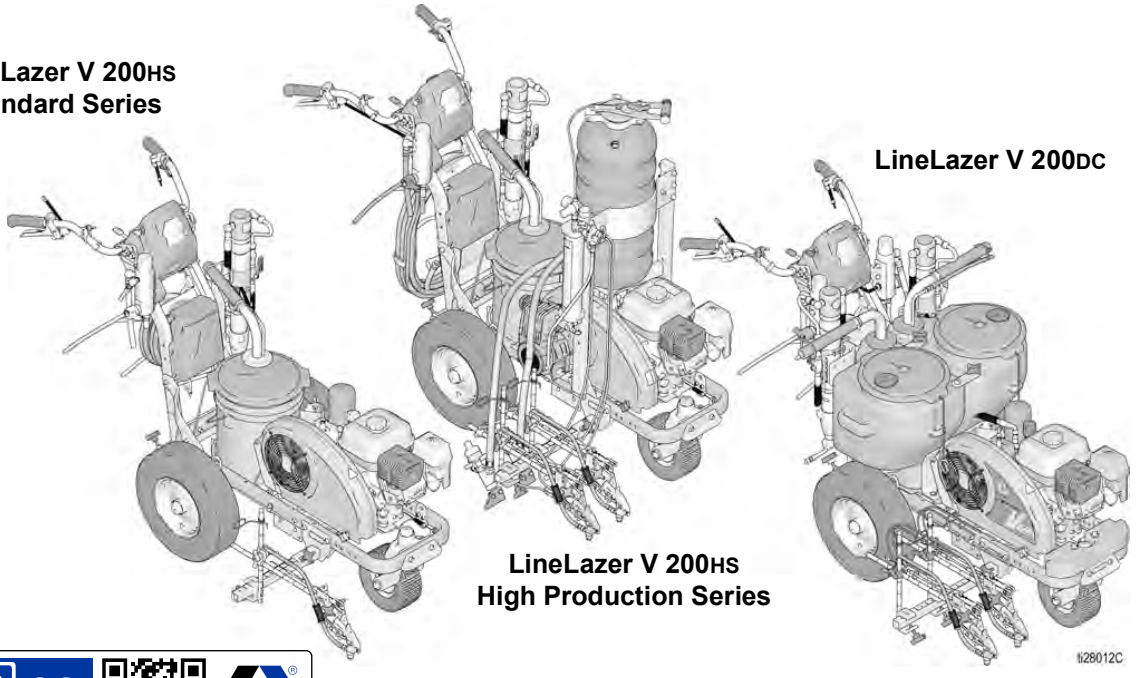

LineLazer V 200DC

LineLazer V 200HS
High Production Series

ti28012C



Use only genuine Graco replacement parts.
The use of non-Graco replacement parts may void warranty.

Contents

Models 3
Warnings 4
Important Laser Information for Units with Laser Option 7
Tip Selection 8
Component Identification (LLV 200HS) 9
Component Identification (LLV 200DC) 10
Grounding Procedure (For Flammable Flushing Fluids Only) 11
Pressure Relief Procedure 11
Setup/Startup 12
SwitchTip and Guard Assembly 15
Gun Placement 16
Install Guns 16
Position Gun 16
Select Guns (Standard Series) 16
Select Guns (HP Auto Series) 17
Gun Positions Chart 18
Gun Arm Mounts 19
Change Gun Position (Front and Back) 19
Change Gun Position (Left and Right) 19
Installation 20
Trigger Sensor Adjustment 20
Gun Cable Adjustment 21
Straight Line Adjustment 22
Handle Bar Adjustment 22
Dot Laser (if applicable) 23
Cleanup 24
LineLazer V LiveLook Display 26
Standard Series 26
Initial Setup (Standard Series) 27
Striping Mode (Standard Series) 29
Measure Mode (Standard Series) 30
Setup/Information 31
Settings 32
Information 33
HP Auto Series and HP Reflective Series 34
LineLazer V LiveLook Display 35
HP Auto Series 35
Initial Setup (HP Auto Series) 36
Striping Mode (HP Auto Series) 38
Measure Mode (HP Auto Series) 39
Layout Mode 40
Stall Calculator 41
Angle Calculator 42
Setup/Information 44
Settings 45
Information 46
Data Logging 48
Maintenance 49
Recycling and Disposal 50
Rechargeable Battery Disposal 50
End of Product Life 50
Troubleshooting 51
Hydraulic Oil/Filter Change 56
Removal 56
Installation 56
Wiring Diagram 200HS (Standard Series) 57
Wiring Diagram 200HS (HP Auto Series/HP Reflective Series) 58
Wiring Diagram 200DC (Standard Series) 59
Wiring Diagram 200DC (HP Auto Series/HP Reflective Series) 60
World Symbol Key 61
Technical Specifications 62
CALIFORNIA PROPOSITION 65 68
Graco Standard Warranty 69
Graco Information 70

Models

LineLazer V 200HS & 200DC											
	Model:	Series	Standard 1 Manual Gun	Standard 2 Manual Guns	HP Auto 1 Auto Gun	HP Auto 1 Manual Gun 1 Auto Gun	HP Auto 2 Auto Guns	HP Reflective 1 Manual Gun 1 PBS Tank	HP Reflective 1 Auto Gun 1 PBS Tank	HP Reflective 2 Auto Guns 1 PBS Tank	HP Reflective 2 Manual Guns 1 PBS Tank
200HS	17H459	B	✓ CE								
	17H461	B		✓ CE							
	17K582	B			✓ CE						
	17H462	B			✓ with laser						
	17K637	B				✓ CE					
	17H463	B				✓ with laser					
	17K583	B					✓ CE				
	17H464	B					✓ with laser				
	17H460	B						✓ CE			
	17J964	B							✓ CE		
	17K585	B								✓ CE	
	17H465	B								✓ with laser	
200DC	17Y269	A					✓ with laser				
	17Y270	A								✓ with laser	
	17Y231	A		✓ CE							
	17Y232	A					✓ CE				
	17Y233	A								✓ CE	
	17Y648	A									✓ CE

*** All auto guns can be actuated manually.**

Warnings

The following warnings are for the setup, use, grounding, maintenance, and repair of this equipment. The exclamation point symbol alerts you to a general warning and the hazard symbols refer to procedure-specific risks. When these symbols appear in the body of this manual or on warning labels, refer back to these Warnings. Product-specific hazard symbols and warnings not covered in this section may appear throughout the body of this manual where applicable.

⚠WARNING



FIRE AND EXPLOSION HAZARD

Flammable fumes, such as solvent and paint fumes, in **work area** can ignite or explode. Paint or solvent flowing through the equipment can cause static sparking. To help prevent fire and explosion:

- Use equipment only in well ventilated area.
- Do not fill fuel tank while engine is running or hot; shut off engine and let it cool. Fuel is flammable and can ignite or explode if spilled on hot surface.
- Eliminate all ignition sources; such as pilot lights, cigarettes, portable electric lamps, and plastic drop cloths (potential static arc).
- Ground all equipment in the work area. See **Grounding** instructions.
- Never spray or flush solvent at high pressure.
- Keep work area free of debris, including solvent, rags and gasoline.
- Do not plug or unplug power cords, or turn power or light switches on or off when flammable fumes are present.
- Use only grounded hoses.
- Hold gun firmly to side of grounded pail when triggering into pail. Do not use pail liners unless they are antistatic or conductive.
- **Stop operation immediately** if static sparking occurs or you feel a shock. Do not use equipment until you identify and correct the problem.
- Keep a working fire extinguisher in the work area.



SKIN INJECTION HAZARD

High-pressure spray is able to inject toxins into the body and cause serious bodily injury. In the event that injection occurs, **get immediate surgical treatment.**

- Do not aim the gun at, or spray any person or animal.
- Keep hands and other body parts away from the discharge. For example, do not try to stop leaks with any part of the body.
- Always use the nozzle tip guard. Do not spray without nozzle tip guard in place.
- Use Graco nozzle tips.
- Use caution when cleaning and changing nozzle tips. In the case where the nozzle tip clogs while spraying, follow the **Pressure Relief Procedure** for turning off the unit and relieving the pressure before removing the nozzle tip to clean.
- Equipment maintains pressure after power is shut off. Do not leave the equipment energized or under pressure while unattended. Follow the **Pressure Relief Procedure** when the equipment is unattended or not in use, and before servicing, cleaning, or removing parts.
- Check hoses and parts for signs of damage. Replace any damaged hoses or parts.
- This system is capable of producing 3300 psi. Use Graco replacement parts or accessories that are rated a minimum of 3300 psi.
- Always engage the trigger lock when not spraying. Verify the trigger lock is functioning properly.
- Verify that all connections are secure before operating the unit.
- Know how to stop the unit and bleed pressure quickly. Be thoroughly familiar with the controls.

⚠WARNING



CARBON MONOXIDE HAZARD

Exhaust contains poisonous carbon monoxide, which is colorless and odorless. Breathing carbon monoxide can cause death.

- Do not operate in an enclosed area.





EQUIPMENT MISUSE HAZARD

Misuse can cause death or serious injury.

- Do not operate the unit when fatigued or under the influence of drugs or alcohol.
- Do not exceed the maximum working pressure or temperature rating of the lowest rated system component. See **Technical Data** in all equipment manuals.
- Use fluids and solvents that are compatible with equipment wetted parts. See Technical Data in all equipment manuals. Read fluid and solvent manufacturer's warnings. For complete information about your material, request Safety Data Sheets (SDSs) from distributor or retailer.
- Do not leave the work area while equipment is energized or under pressure.
- Turn off all equipment and follow the **Pressure Relief Procedure** when equipment is not in use.
- Check equipment daily. Repair or replace worn or damaged parts immediately with genuine manufacturer's replacement parts only.
- Do not alter or modify equipment. Alterations or modifications may void agency approvals and create safety hazards.
- Make sure all equipment is rated and approved for the environment in which you are using it.
- Use equipment only for its intended purpose. Call your distributor for information.
- Route hoses and cables away from traffic areas, sharp edges, moving parts, and hot surfaces.
- Do not kink or over bend hoses or use hoses to pull equipment.
- Keep children and animals away from work area.
- Comply with all applicable safety regulations.



PRESSURIZED ALUMINUM PARTS HAZARD

Use of fluids that are incompatible with aluminum in pressurized equipment can cause serious chemical reaction and equipment rupture. Failure to follow this warning can result in death, serious injury, or property damage.

- Do not use 1,1,1-trichloroethane, methylene chloride, other halogenated hydrocarbon solvents or fluids containing such solvents.
- Do not use chlorine bleach.
- Many other fluids may contain chemicals that can react with aluminum. Contact your material supplier for compatibility.





MOVING PARTS HAZARD

Moving parts can pinch, cut or amputate fingers and other body parts.

- Keep clear of moving parts.
- Do not operate equipment with protective guards or covers removed.
- Equipment can start without warning. Before checking, moving, or servicing equipment, follow the **Pressure Relief Procedure** and disconnect all power sources.



ENTANGLEMENT HAZARD

Rotating parts can cause serious injury

- Keep clear of moving parts.
- Do not operate equipment with protective guards or covers removed.
- Do not wear loose clothing, jewelry or long hair while operating equipment.
- Equipment can start without warning. Before checking, moving, or servicing equipment, follow the **Pressure Relief Procedure** and disconnect all power sources.

WARNING



TOXIC FLUID OR FUMES HAZARD

Toxic fluids or fumes can cause serious injury or death if splashed in the eyes or on skin, inhaled, or swallowed.

- Read Safety Data Sheets (SDSs) to know the specific hazards of the fluids you are using.
- Store hazardous fluid in approved containers, and dispose of it according to applicable guidelines.



BURN HAZARD

Equipment surfaces and fluid that's heated can become very hot during operation. To avoid severe burns:

- Do not touch hot fluid or equipment.



PERSONAL PROTECTIVE EQUIPMENT

Wear appropriate protective equipment when in the work area to help prevent serious injury, including eye injury, hearing loss, inhalation of toxic fumes, and burns. This protective equipment includes but is not limited to:

- Protective eyewear, and hearing protection.
- Respirators, protective clothing, and gloves as recommended by the fluid and solvent manufacturer.



BATTERY HAZARD

The battery may leak, explode, cause burns, or cause an explosion if mishandled. Contents of an open battery can cause severe irritation and/or chemical burns. If on skin, wash with soap and water. If in eyes, flush with water for at least 15 minutes and get immediate medical attention.

- Only use the battery type specified for use with the equipment. See **Technical Data**.
- Replace battery only in well-ventilated area and away from flammable or combustible materials, including paints and solvents.
- Do not dispose of battery in fire or heat above 50°C (122°F). The battery is capable of exploding.
- Do not throw into fire.
- Do not expose battery to water or rain.
- Do not disassemble, crush, or penetrate the battery.
- Do not use or charge a battery that is cracked or damaged.
- Follow local ordinances and/or regulations for disposal.



ELECTRIC SHOCK HAZARD

Hazardous voltage is present in control box while engine is running.

- Turn off engine before servicing equipment.

Important Laser Information for Units with Laser Option

⚠WARNING



LASER LIGHT HAZARD: AVOID DIRECT EYE CONTACT

Eye exposure to Class IIIa3/3R levels of laser light can potentially present an eye (retinal) injury hazard, including spot blindness or other retinal injury. To avoid direct eye exposure:

- Never look directly in to a laser beam or point the beam into the eyes of others, even at long distances.
- Never shine the laser at mirror like surfaces which can cause specular reflections of the beam.
- Always set the laser at a height and angle that prevents the beam from shining into people's eyes.
- Immediately terminate laser emissions if personnel, animals or reflective objects approach the beam.
- Always turn off laser when unattended.
- Do not remove any warning labels from the laser.
- Only properly trained laser operators are to use this product.
- Never allow beams to be aimed toward traffic, vehicles, or heavy equipment. Even when not damaging at long distances, the high brightness of lasers can distract or disrupt vehicle operations.
- Never point a laser at an aircraft or law enforcement personnel. This is considered a felony in most locations, with the possibility of jail time, heavy fines or both.
- Do not disassemble laser product. Return to factory for all service procedures.
- Laser must be turned OFF when cleaning the lens, so as not to create unwanted laser refraction.



LASER RADIATION HAZARD

Use of controls or adjustments or performance of procedures other than those specified herein may result in hazardous radiation exposure.

- Do not attempt to open or disassemble the laser housing under any circumstances. Doing so may cause exposure to potentially hazardous levels of laser radiation.
- No serviceable parts within. Unit is factory sealed.



FIRE AND EXPLOSION HAZARD

Connecting directly to a generator source can create a short or sparking under certain conditions.

- Only connect GL1700 to a dedicated 12 volt DC battery source.

Tip Selection

	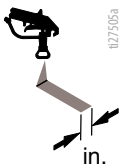 in. (cm)	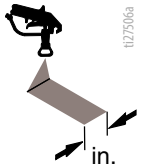 in. (cm)	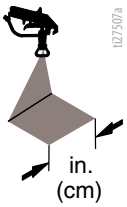 in. (cm)	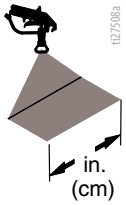 in. (cm)	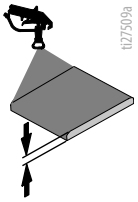	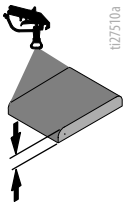	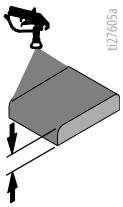
LL5213*	2 (5)				✓		
LL5215*	2 (5)					✓	
LL5217		4 (10)				✓	
LL5219		4 (10)					✓
LL5315		4 (10)			✓		
LL5317		4 (10)			✓		
LL5319		4 (10)				✓	
LL5321		4 (10)				✓	
LL5323		4 (10)				✓	
LL5325		4 (10)					✓
LL5327		4 (10)					✓
LL5329		4 (10)					✓
LL5331		4 (10)					✓
LL5333		4 (10)					✓
LL5335		4 (10)					✓
LL5355		4 (10)					✓
LL5417			6 (15)		✓		
LL5419			6 (15)		✓		
LL5421			6 (15)		✓		
LL5423			6 (15)			✓	
LL5425			6 (15)			✓	
LL5427			6 (15)			✓	
LL5429			6 (15)			✓	
LL5431			6 (15)				✓
LL5435			6 (15)				✓
LL5621				12 (30)	✓		
LL5623				12 (30)	✓		
LL5625				12 (30)	✓		
LL5627				12 (30)	✓		
LL5629				12 (30)	✓		
LL5631				12 (30)		✓	
LL5635				12 (30)		✓	
LL5639				12 (30)			✓

*Use 100 mesh filter to reduce tip clogs.

Component Identification (LLV 200HS)

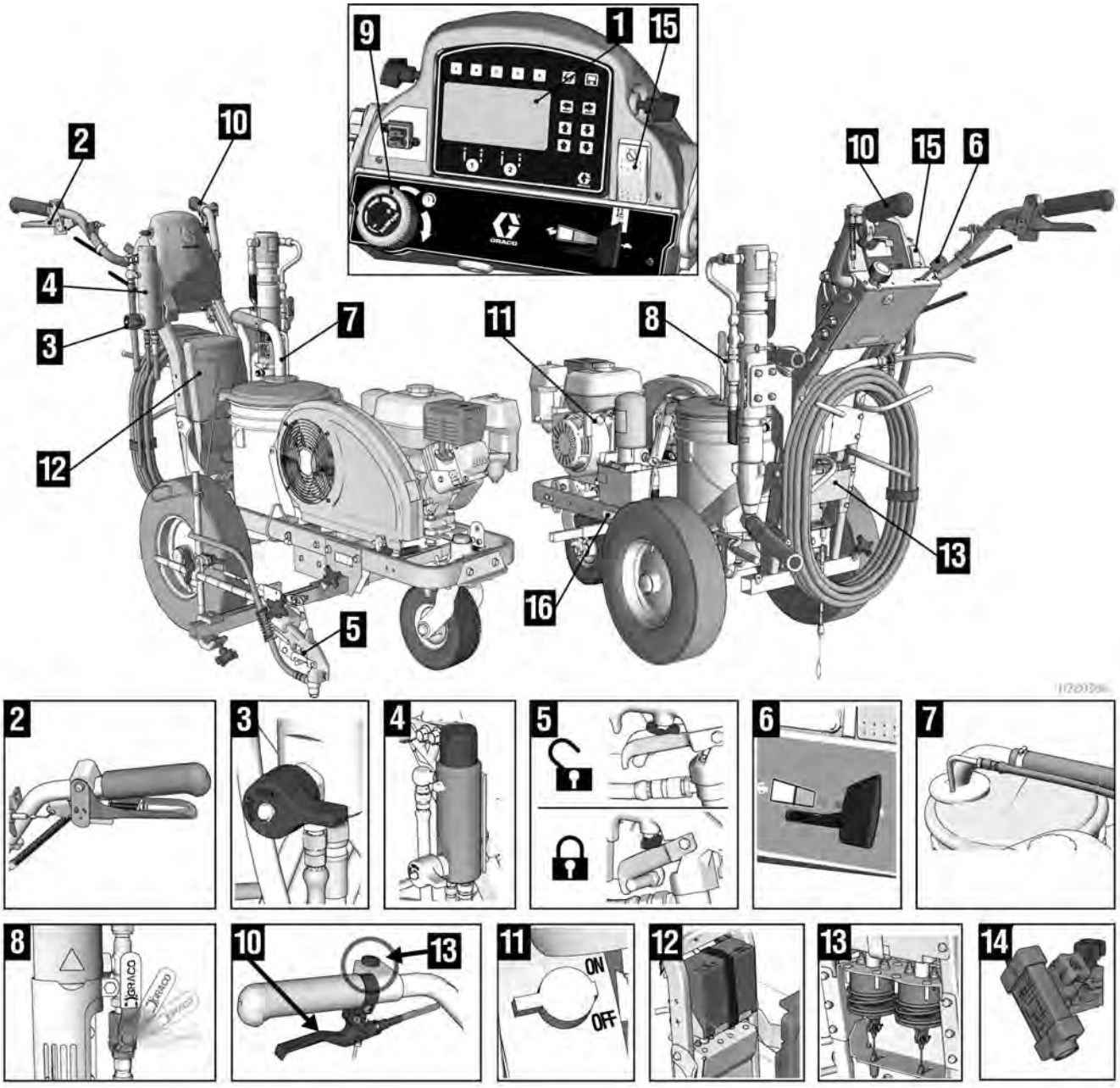

1	Display
2	Manual Spray Gun Trigger
3	Prime/Spray Valve
4	Filter
5	Trigger Lock
6	Engine/Controls
7	Drain and Siphon Tubes
8	Pump ON/OFF Lever
9	Pressure Control

10	Turn Control
11	Engine STOP
*12	12 Volt Battery
*13	Gun Actuators / Solenoids
*14	Layout Laser
15	Engine Kill Switch
16	Identification Label
*17	Auto Spray Gun Control Button

*HP Auto Series only.

Component Identification (LLV 200DC)

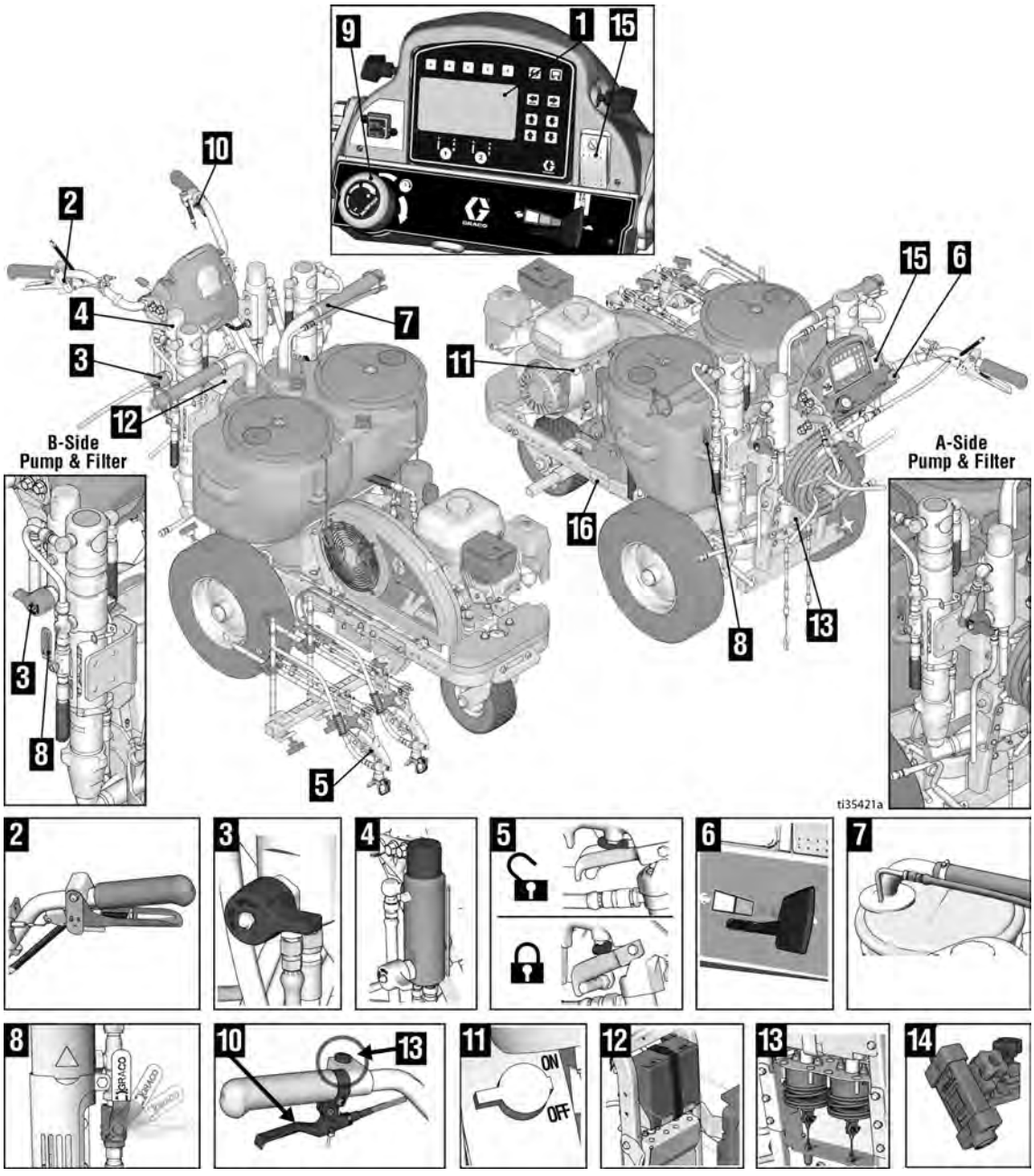

1	Display
2	Manual Spray Gun Trigger
3	Prime/Spray Valve
4	Filter
5	Trigger Lock
6	Engine/Controls
7	Drain and siphon tubes
8	Pump ON/OFF lever
9	Pressure control

10	Turn control
11	Engine STOP
*12	12 volt battery
*13	Gun Actuators / Solenoids
*14	Layout laser
15	Engine kill switch
16	Identification label
*17	Auto Spray Gun Control Button

*HP Auto Series only.

Grounding Procedure (For Flammable Flushing Fluids Only)



This equipment must be grounded to reduce the risk of static sparking. Static sparking can cause fumes to ignite or explode. Grounding provides an escape wire for the electric current.

1. Position striper so that the tires are not on pavement.
2. Striper is shipped with a grounding clamp. Grounding clamp must attach to grounded object (e.g. metal sign post).

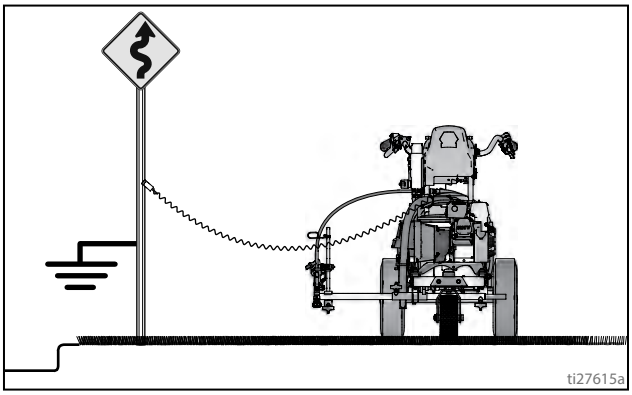

3. Disconnect grounding clamp after flushing is complete.

Pressure Relief Procedure

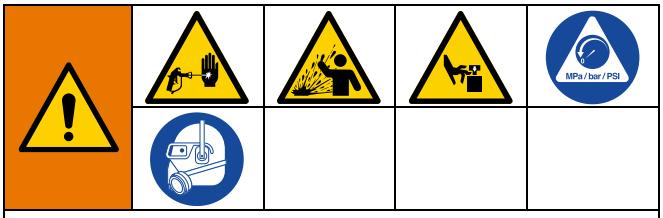

This equipment stays pressurized until pressure is manually relieved. To help prevent serious injury from pressurized fluid, such as skin injection, splashing fluid and moving parts, follow the Pressure Relief Procedure when you stop spraying and before cleaning, checking, or servicing the equipment.

1. Perform **Grounding Procedure (For Flammable Flushing Fluids Only)**, page 11.
2. Set pump switch to **OFF**. Turn engine **OFF**.

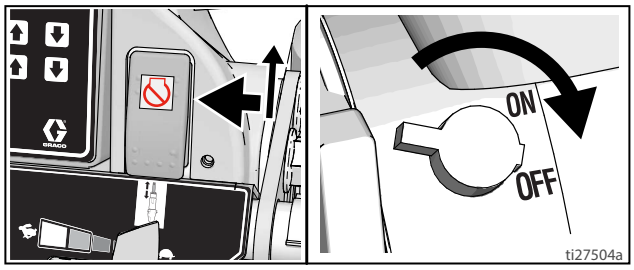

3. Turn pressure control to lowest setting. Trigger all guns to relieve pressure.

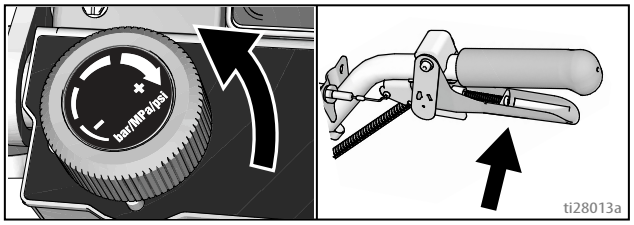

4. Engage all gun trigger locks. Turn prime valve down.

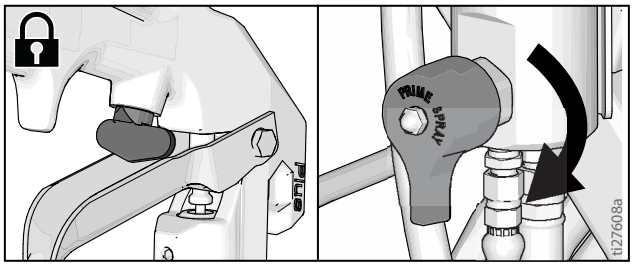

5. If you suspect the spray tip or hose is clogged or that pressure has not been fully relieved:
   a. VERY SLOWLY loosen the tip guard retaining nut or the hose end coupling to relieve pressure gradually.
   b. Loosen the nut or coupling completely.
   c. Clear the obstruction in the hose or tip.

Setup/Startup

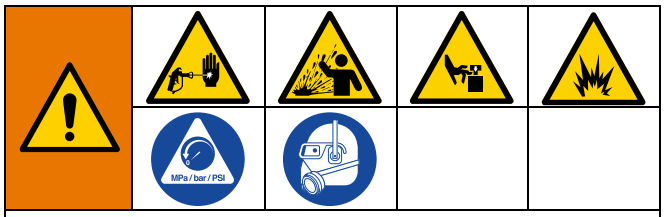

This equipment stays pressurized until pressure is manually relieved. To help prevent serious injury from pressurized fluid, such as skin injection, splashing fluid and moving parts, follow the Pressure Relief Procedure when you stop spraying and before cleaning, checking, or servicing the equipment.

1. Perform **Pressure Relief Procedure**, page 11.
2. Perform **Grounding Procedure (For Flammable Flushing Fluids Only)**, page 11, if using flammable materials.
3. Fill throat packing nut with Throat Seal Liquid (TSL) to decrease packing wear. Both for 200DC.

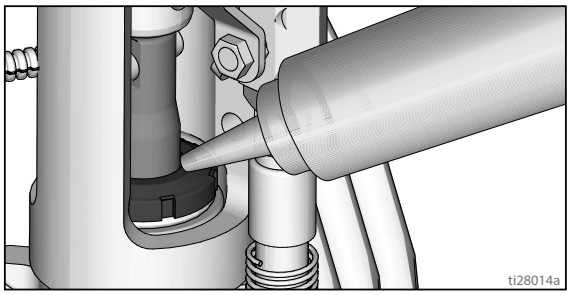

4. Check engine oil level. Add SAE 10W-30 (summer) or 5W-30 (winter). See engine manual.

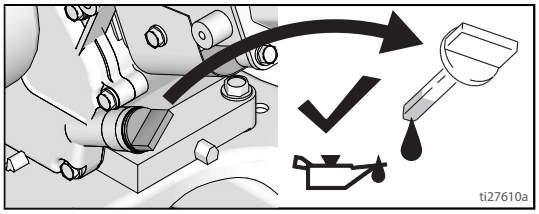

5. Fill fuel tank.
6. Set pump switch to **OFF**. Both for 200DC

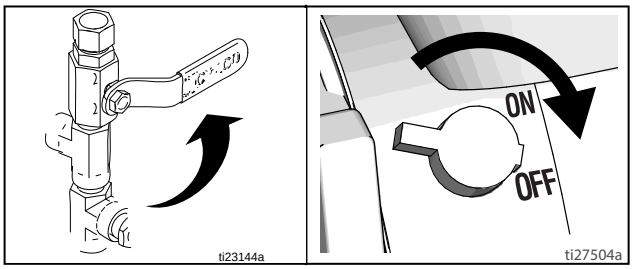

7. If removed, install strainer. Both for 200DC

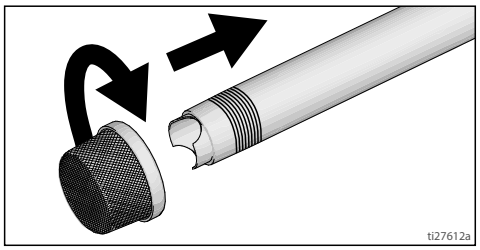

8. Turn prime valve down (both for 200DC). Turn pressure control counterclockwise to lowest pressure.

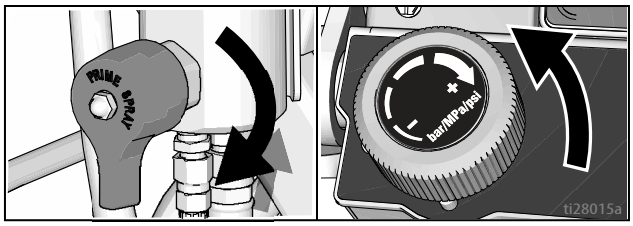

NOTE: Minimum hose size allowable for proper sprayer operation is one 3/8 in. x 22 ft for LL200HS, or two 3/8 in. x 11’ 10” for LL200DC.

9. Place siphon tube set in grounded metal pail partially filled with flushing fluid. Attach ground wire to true earth ground. Use water to flush water-base paint and mineral spirits to flush oil-base paint and storage oil. For 200DC, perform this step for first color/pump to be primed.

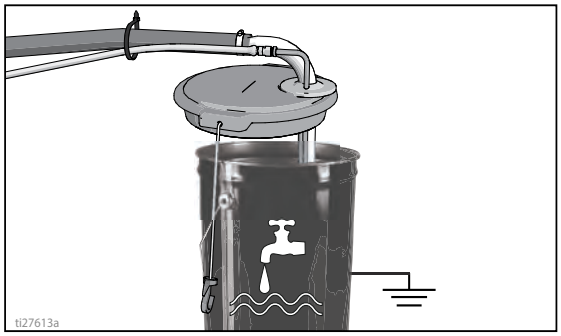

10. Start engine:

    a. Move fuel valve to open.

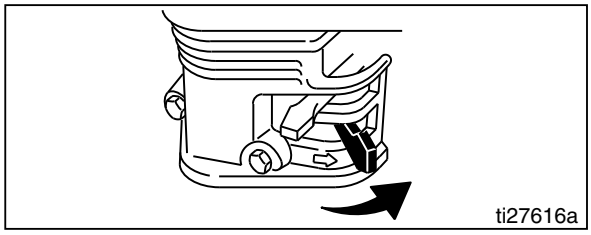

    b. Move choke to closed.

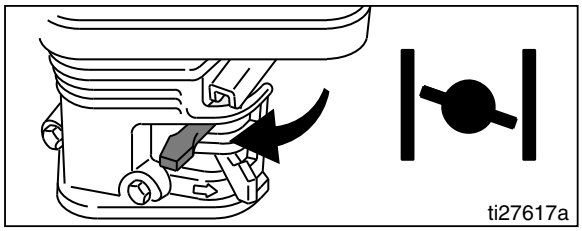

    c. Set throttle to fast.

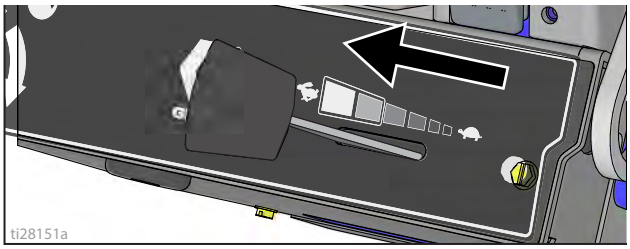

    d. Set engine switch to ON.

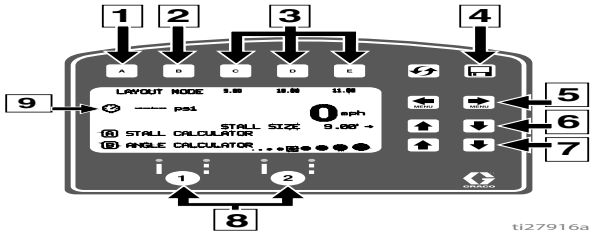

    e. Pull starter cord.

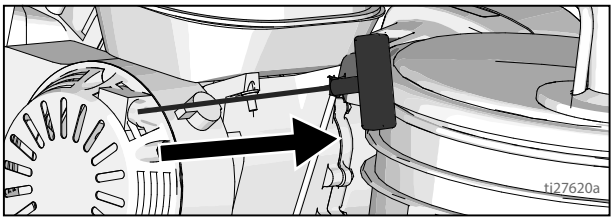

11. After engine starts, move choke to open.

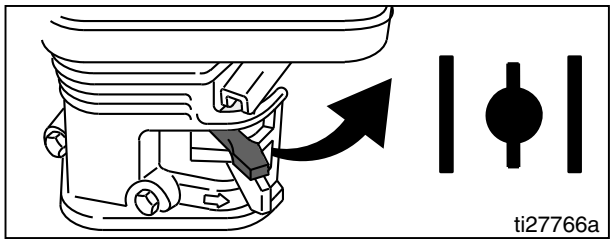

12. Set throttle to desired setting.

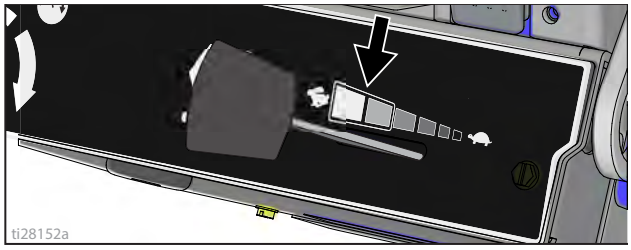

13. Digital display is functional after engine starts.

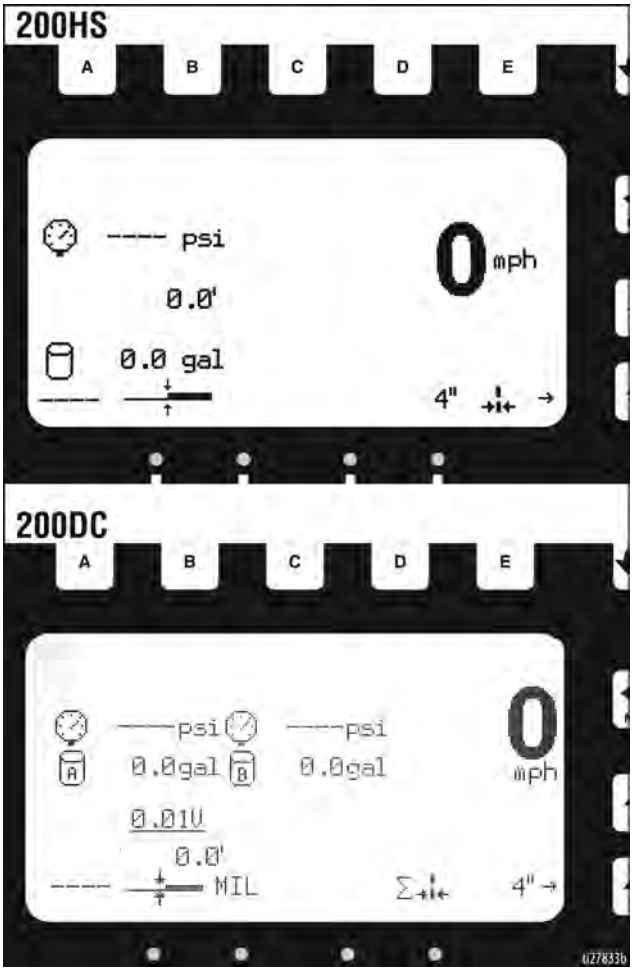

14. Set pump switch to **ON** (pump is now active). For 200DC, perform this step for first color/pump to be primed.

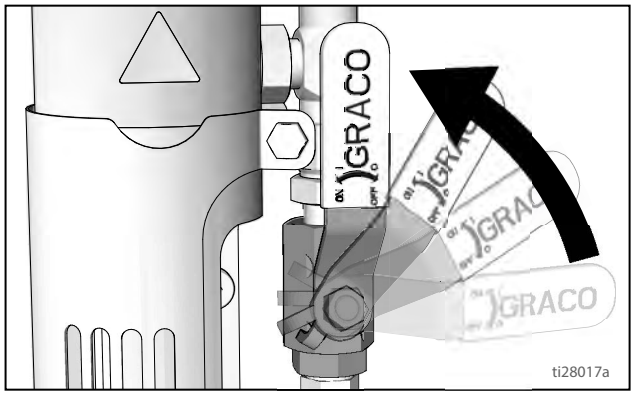

15. Increase pressure control enough to start pump. Allow fluid to circulate for 15 seconds.

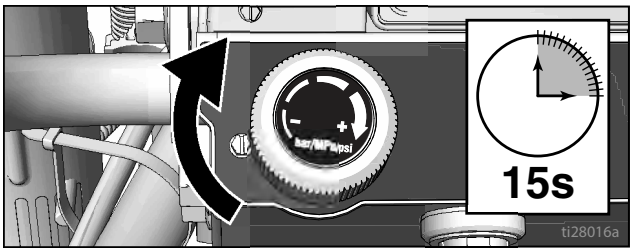

16. Turn pressure down, turn prime valve horizontal. Disengage gun trigger lock.

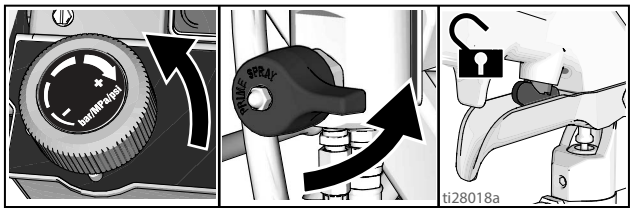

17. Hold all guns against a grounded metal flushing pail. Trigger guns and increase fluid pressure slowly until pumps run smoothly.

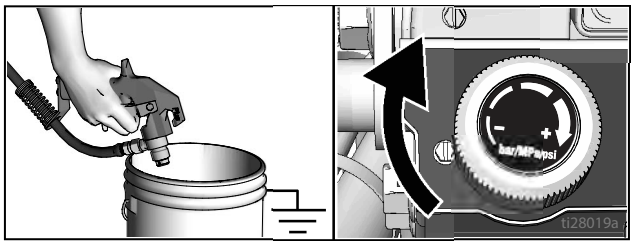



High-pressure spray is able to inject toxins into the body and cause serious bodily injury. Do not stop leaks with hand or rag.

18. Inspect fittings for leaks. If leaks occur, turn sprayer OFF immediately. Perform **Pressure Relief Procedure**. Tighten leaky fittings. Repeat **Startup**, steps 1 - 17. If no leaks, continue to trigger gun until system is thoroughly flushed. Proceed to step 19.

19. Place siphon tube in paint pail.

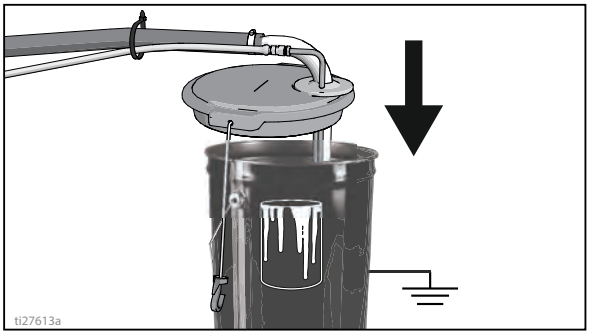

20. Trigger all guns again into a flushing fluid pail until paint appears. Assemble tips and guards.

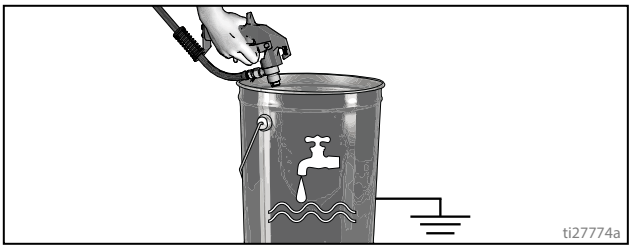

21. For 200DC, repeat steps 8-9, and 14-20 for second color/pump to be primed.

SwitchTip and Guard Assembly



To avoid serious injury from skin injection do not put your hand in front of the spray tip when installing or removing the spray tip and tip guard.

1. Engage trigger lock. Use end of SwitchTip to press OneSeal into tip guard, with curve matching tip bore.

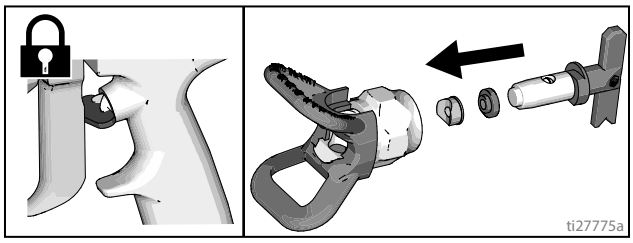

2. Insert SwitchTip in tip bore and firmly thread assembly onto gun.

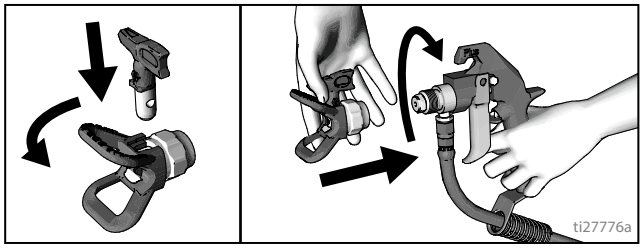

Gun Placement

Install Guns

1. Insert guns into gun holder. Tighten clamps.

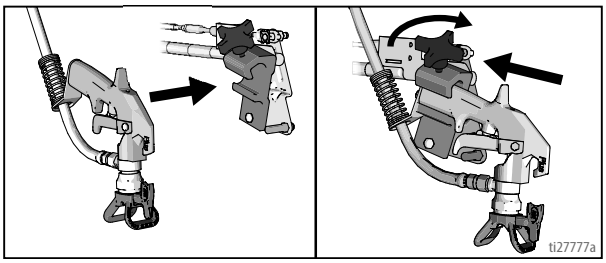

Position Gun

2. Position gun: up/down, forward/reverse, left/right. See **Gun Positions Chart**, page 18, for examples.

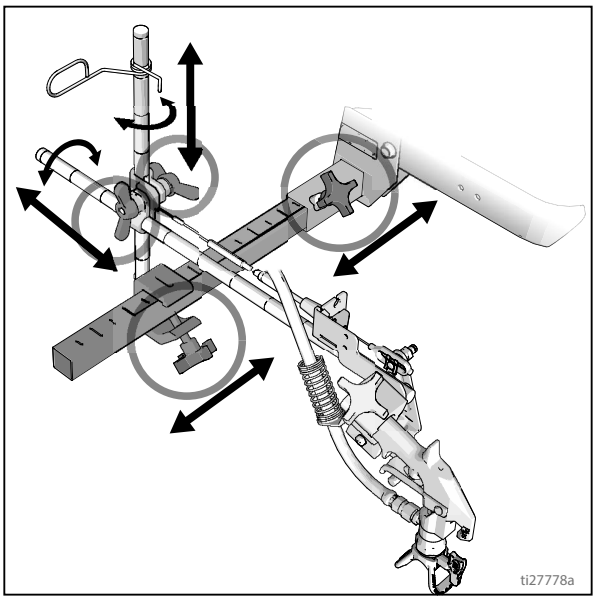

NOTE: When striping above a curb, the mounting clamp can be rotated for clearance.

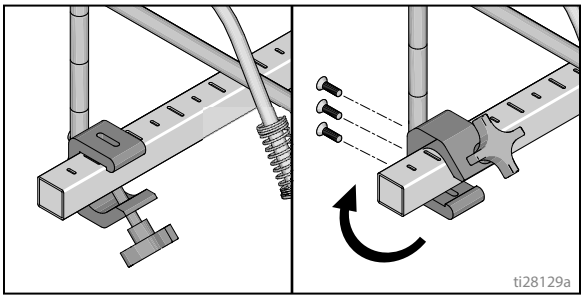

Another option can be to swing the gun out at an angle and rotate the tip guard. This results in better visibility for the user.

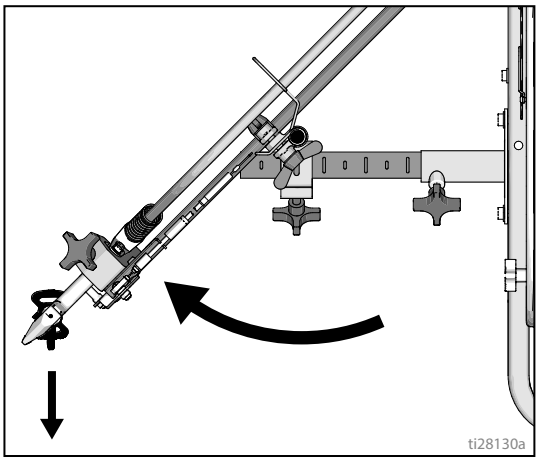

Select Guns (Standard Series)

3. Connect gun cables to left or right gun selector plates.

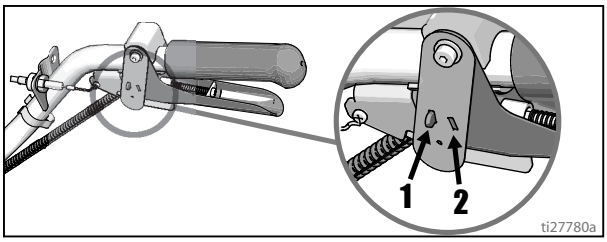

a. One gun: Disconnect one gun selector plate from trigger.



b. Both guns simultaneously: Adjust both gun selector plates to the same position.



c. Solid-skip and skip-solid: Adjust solid-line gun to position 1 and skip-line to position 2.

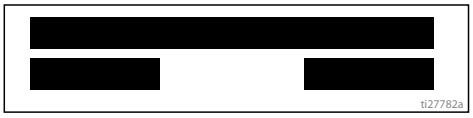

Select Guns (HP Auto Series)

1. Use the gun selector buttons to determine which guns are active. Each gun selector has 3 settings: continuous line, OFF and programmed line pattern.

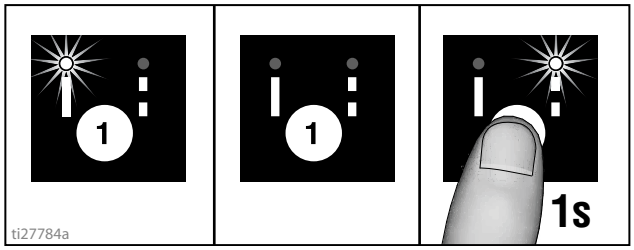

2. Use the auto gun trigger control to actuate guns.

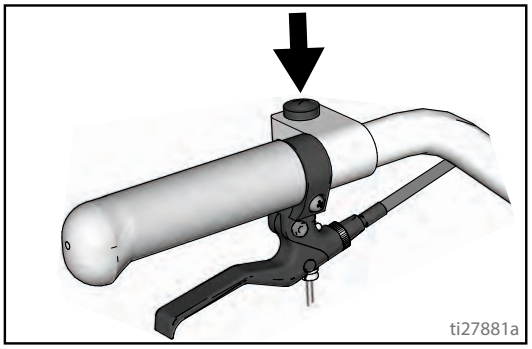

4 Examples:

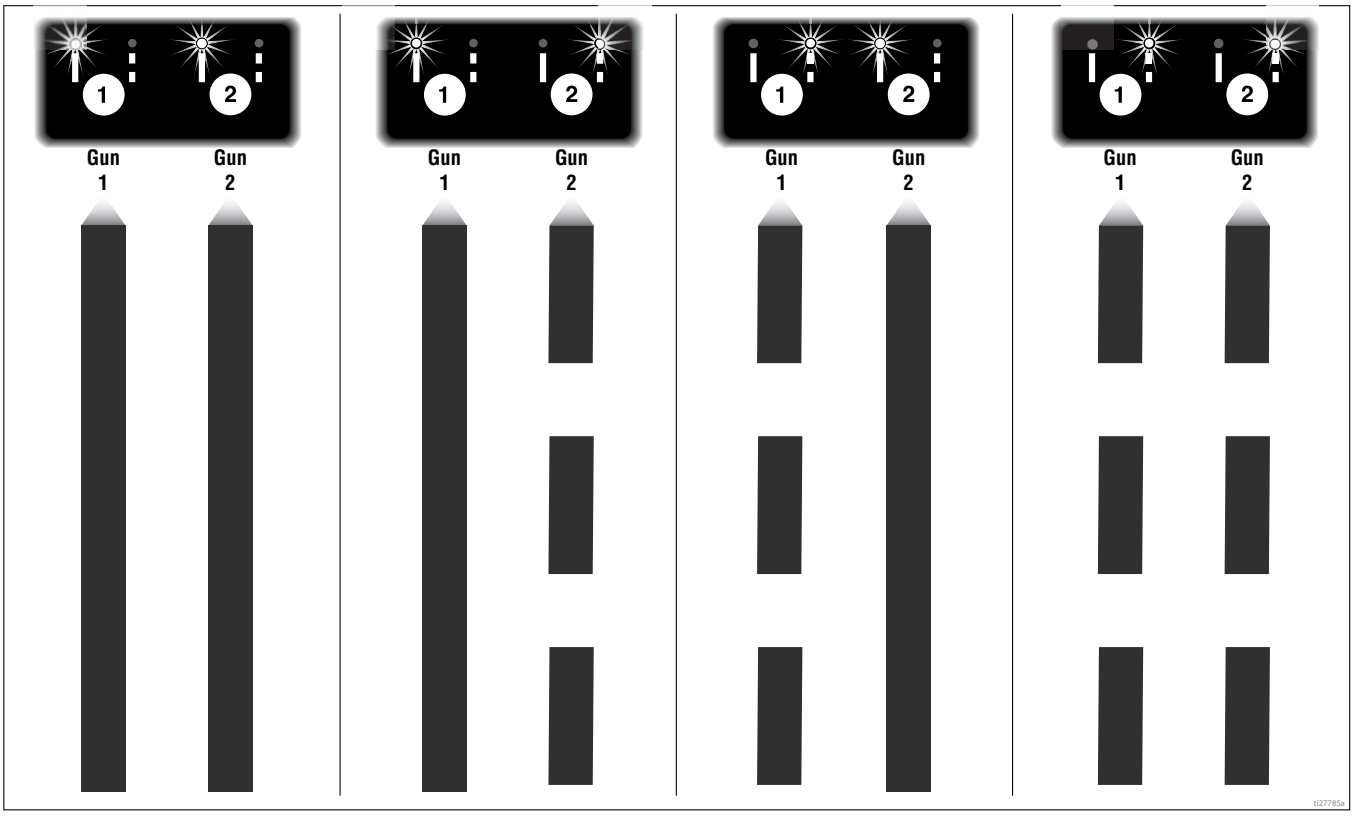

Gun Positions Chart

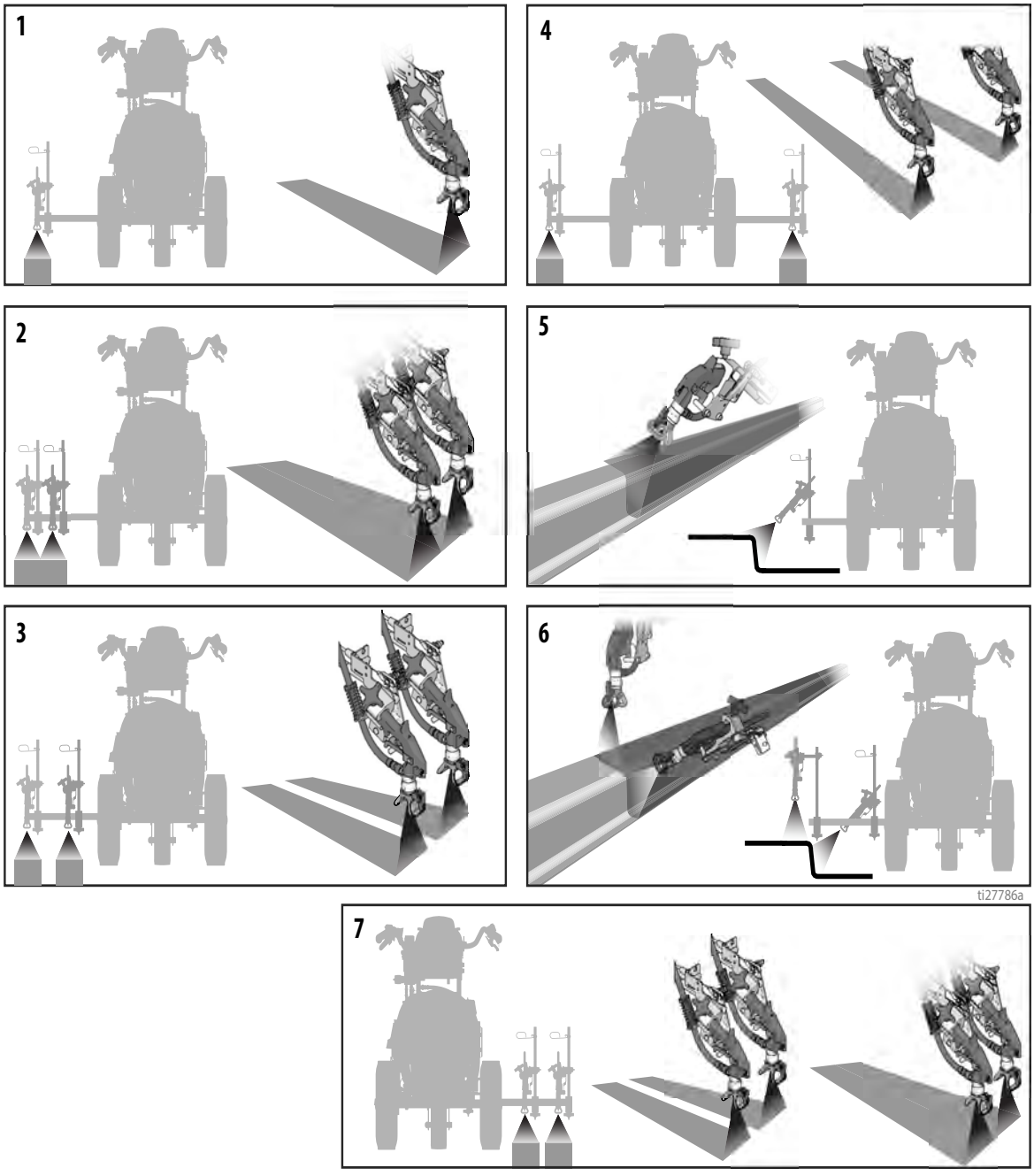

1	One line
2	One line up to 24 in. (61cm) wide
3	Two lines
4	One line or two lines to spray around obstacles
5	One gun curb
6	Two gun curb
7	Two lines or one line up to 24 in. (61 cm) wide

Gun Arm Mounts

This unit is equipped with front and rear gun arm mounts.

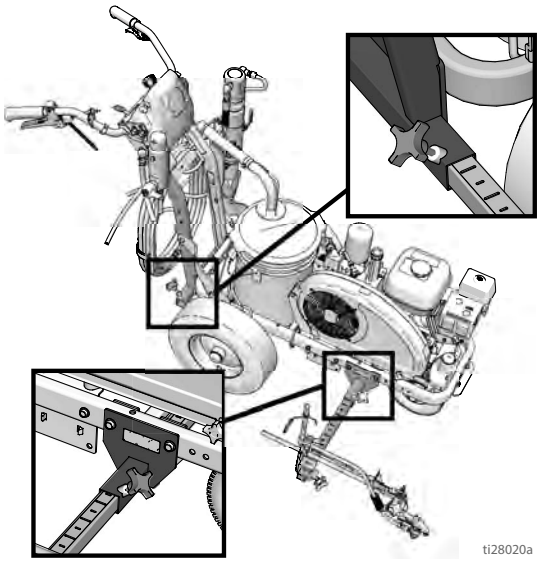

Change Gun Position (Front and Back)

1. Loosen gun arm knob and remove from gun arm mounting slot.

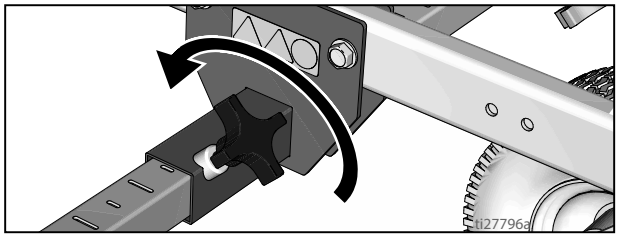

2. Slide gun arm assembly (including gun and hoses) out from gun arm mounting slot.

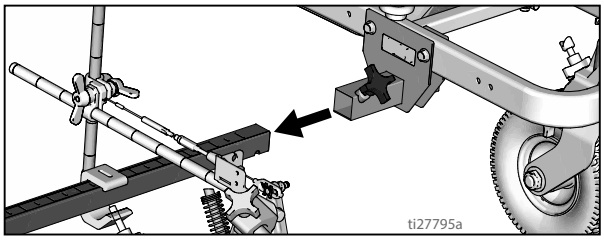

3. Slide gun arm assembly into desired gun arm mounting slot.

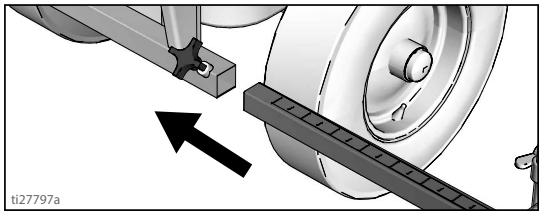

4. Tighten gun arm knob into gun arm mounting slot.

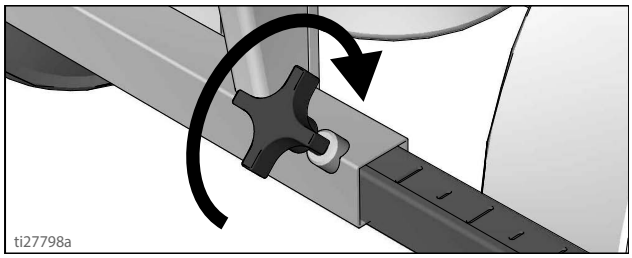

NOTICE

Make sure all hoses, cables, and wires are properly routed through brackets and do NOT rub on tire. Contact with tire will result in damaged hoses, cables, and wires.

Change Gun Position (Left and Right)

Removal

1. Loosen vertical gun arm knob on gun arm mounting bar and remove.

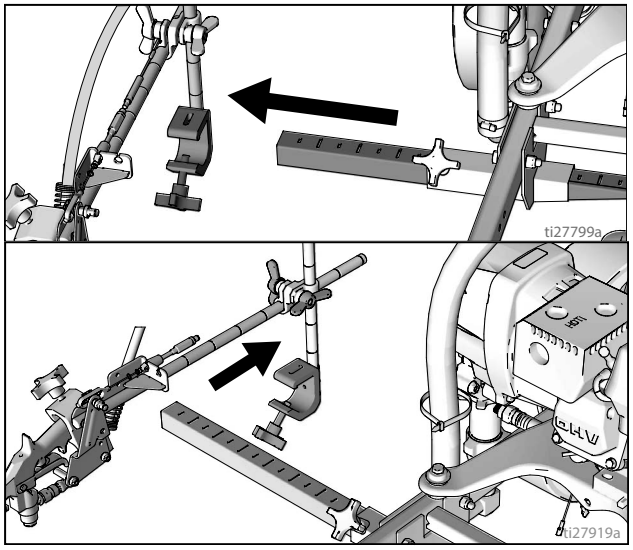

2. Extend mounting bar on opposite side of the machine.

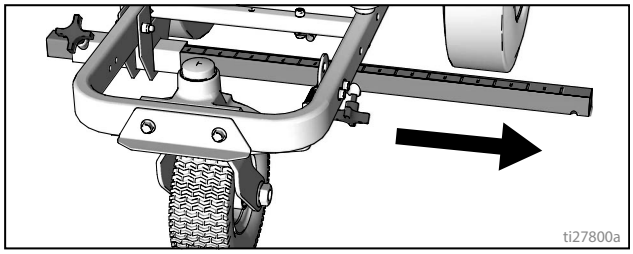

Installation

1. Install vertical gun mount onto gun bar.

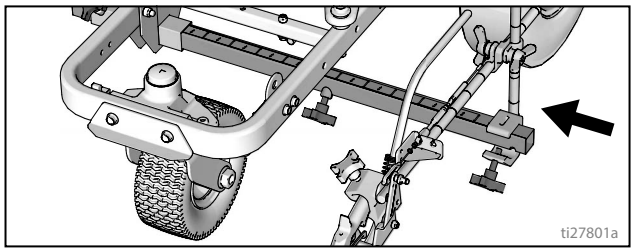

NOTE: Make sure all hoses, cables, and wires are properly routed through brackets.

Trigger Sensor Adjustment

1. Start striper engine. Pull trigger. Spray icon should appear simultaneously with start of fluid spray.

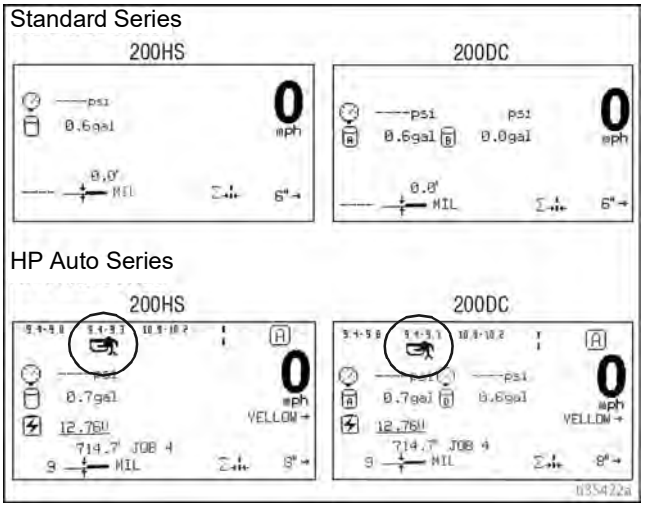

No fluid spray

2. Turn screw in handle clockwise if spray icon appears before fluid spray starts.

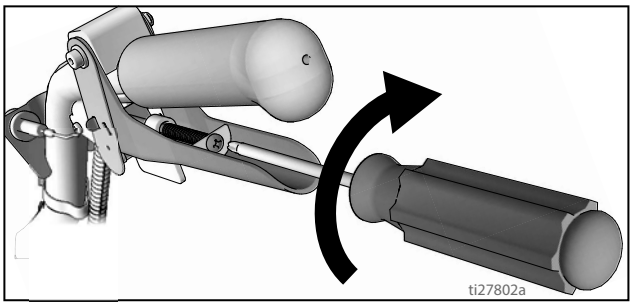

No spray icon

3. Turn screw in handle counterclockwise if fluid spray starts before spray icon appears.

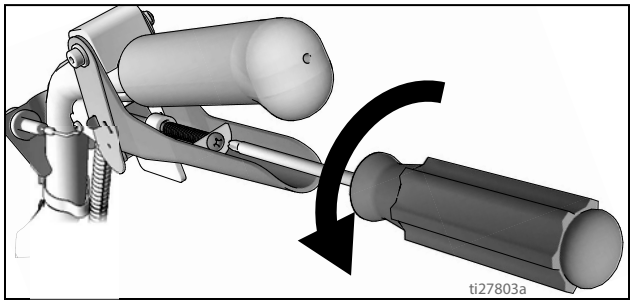

4. Continue adjusting screw in trigger until timing of spray icon and fluid spray are synchronized.

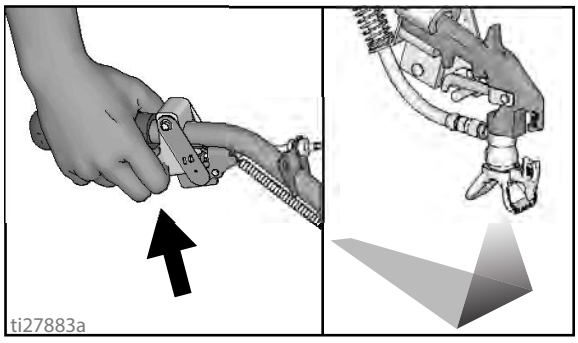

Gun Cable Adjustment

Adjusting the gun cable will increase or decrease the gap between the trigger plate and the gun trigger. To adjust trigger gap, perform the steps below.

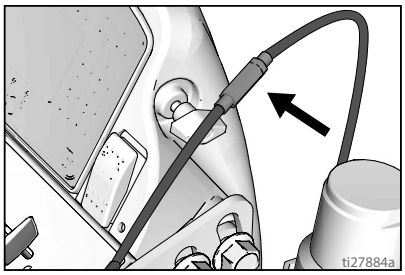

Standard Series

HP Auto Series
(has 2 locations)

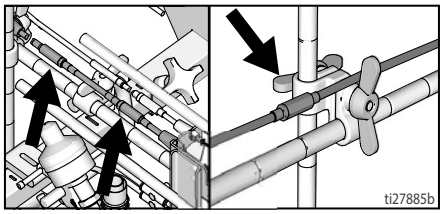

1. Use wrench to loosen locking nut on cable adjuster.

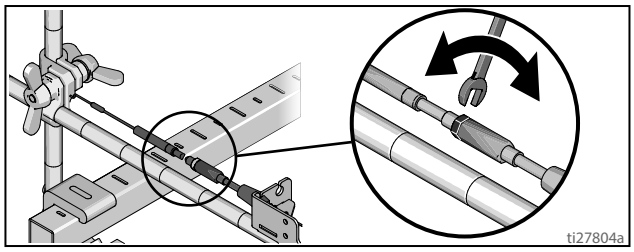

2. Loosen or tighten adjuster until desired result is achieved. **NOTE:** More thread exposed means less gap between gun trigger and trigger plate.
3. Use wrench to tighten locking nut on the adjuster.

Adding Gun Cable (HP Auto Series)

The HP Auto Series can be equipped with two gun actuators. Each gun actuator is capable of operating one cable.

1. Select cable end with adjuster.
2. Install exposed cable through cable bracket slot.

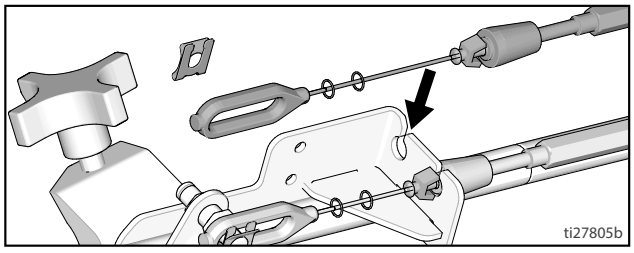

3. Insert plastic cable retainer into cable bracket hole.

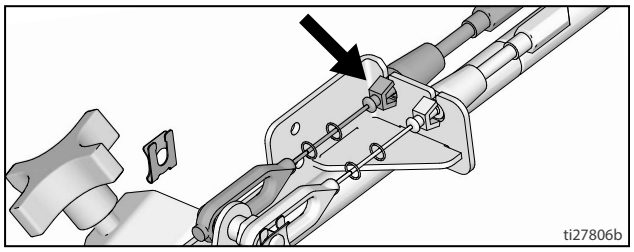

4. Install cable end onto trigger plate pin and install clip.

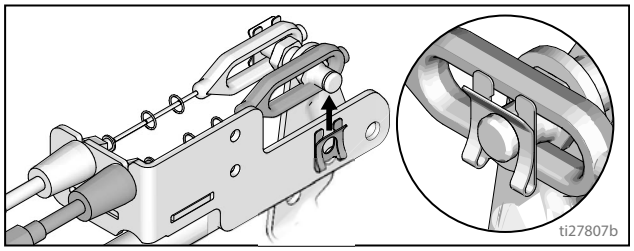

5. Route cable around unit and up through cable holes behind hose mount.

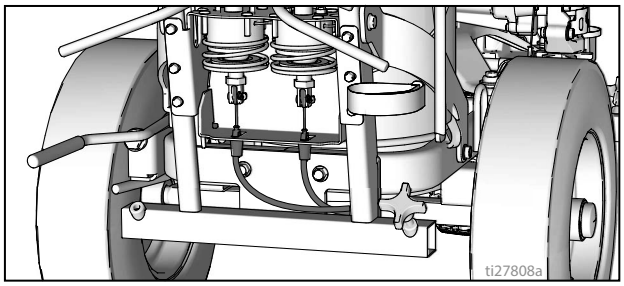

6. Route cable end loop through rectangular hole in bracket and insert plastic cable retainer into the actuator bracket. Install cable end onto actuator rod and install pin.

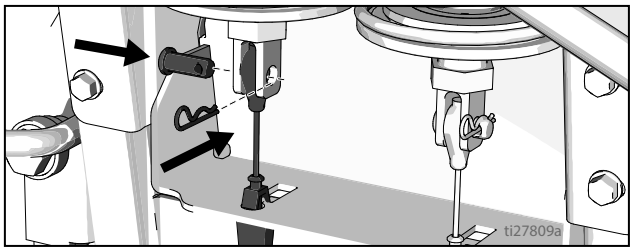

Straight Line Adjustment

The front wheel is set to center the unit and allow the operator to form straight lines. Over time, the wheel may become misaligned and will need to be readjusted. To re-center the front wheel, perform the following steps:

1. Loosen bolt on the front wheel bracket.

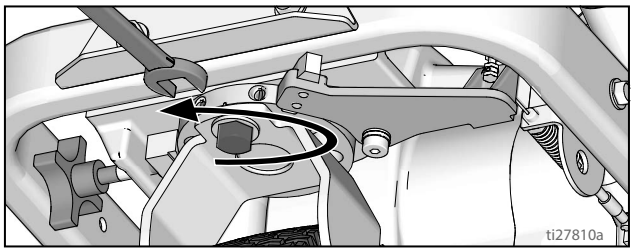

2. If striper arcs to the right, loosen left set screw and tighten right set screw for fine tune adjustment.

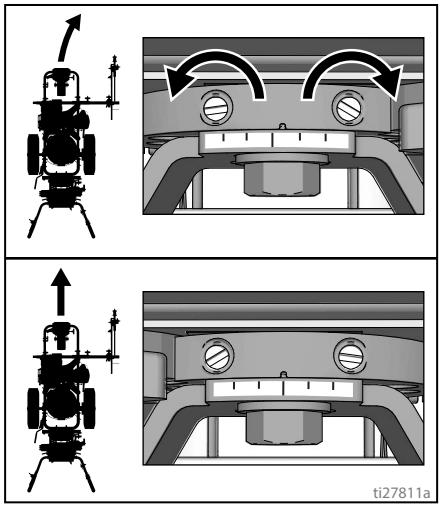

3. If striper arcs to the left, loosen right set screw and tighten left set screw.

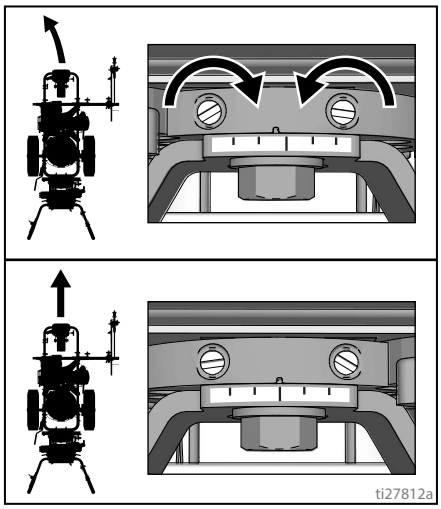

4. Roll the striper. Repeat steps 2 and 3 until striper rolls straight. Tighten bolt on wheel alignment plate to lock the new wheel setting.

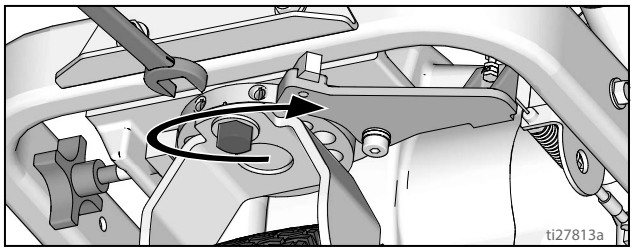

Handle Bar Adjustment

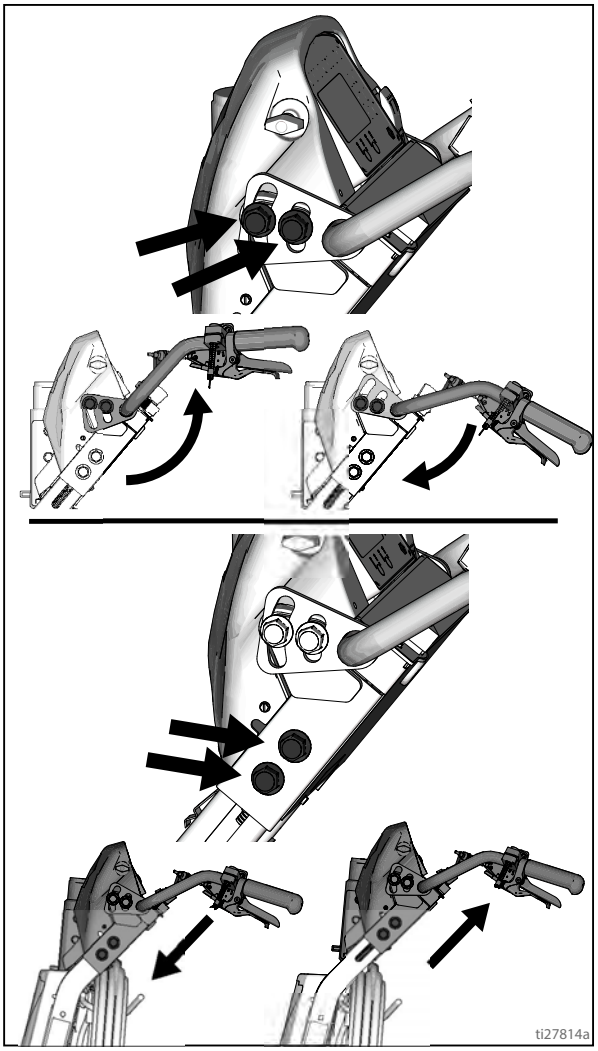

Dot Laser (if applicable)



LASER LIGHT HAZARD. Avoid direct eye contact.

1. Remove battery cover.

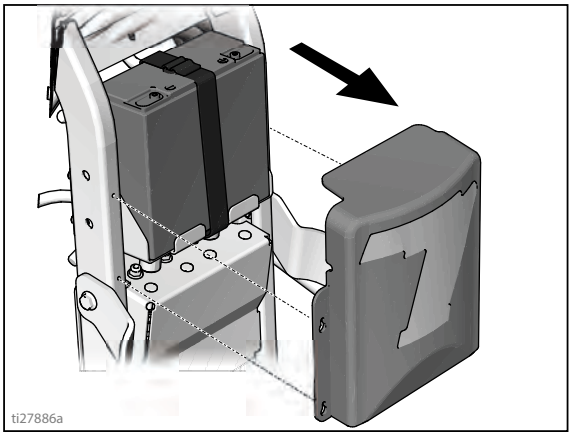

2. Attach ON/OFF switch to desired location on the handle bar.

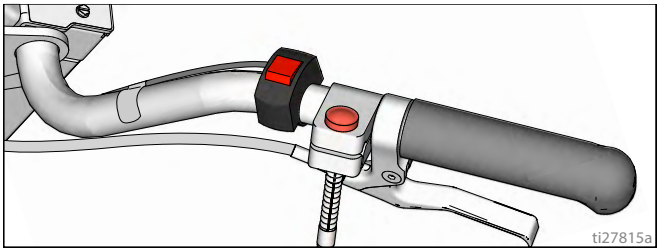

3. Attach laser to desired location on the gun arm.

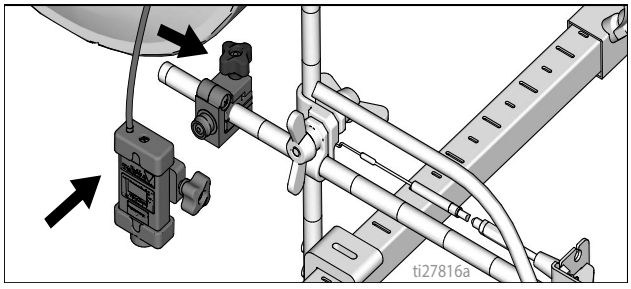

4. Route wires from the switch to the battery and connect to the (+) and (-) terminals.

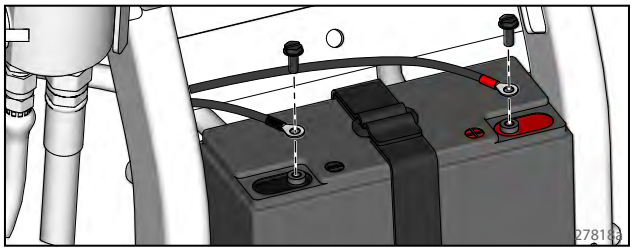

5. Connect the switch leads to the wire harness.

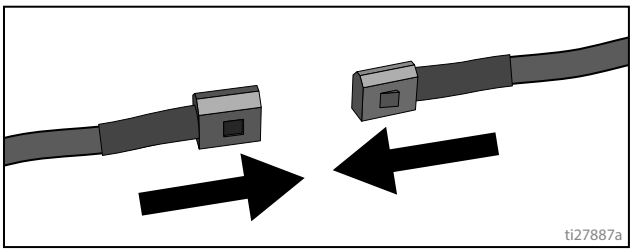

6. Reattach battery cover.

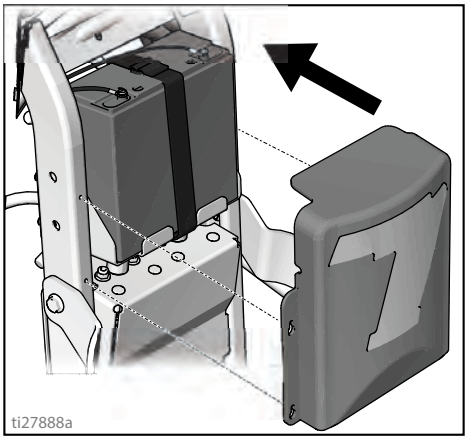

7. Turn on laser and position dot underneath gun head.

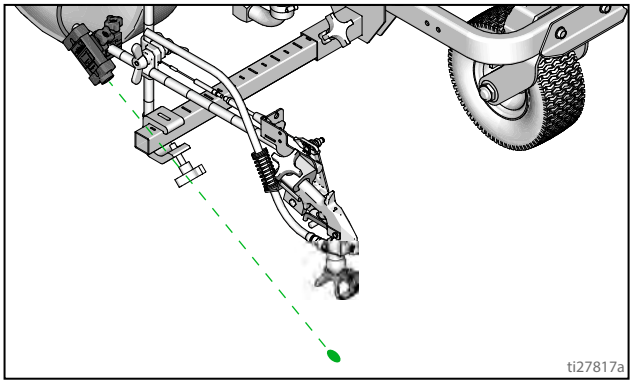

Cleanup

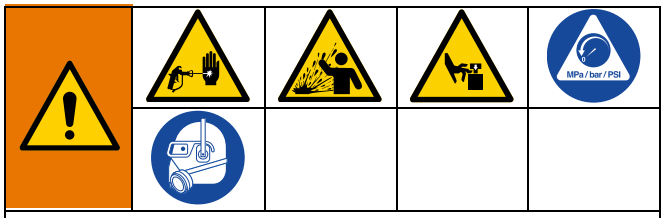

This equipment stays pressurized until pressure is manually relieved. To help prevent serious injury from pressurized fluid, such as skin injection, splashing fluid and moving parts, follow the Pressure Relief Procedure when you stop spraying and before cleaning, checking, or servicing the equipment.

1. Perform **Pressure Relief Procedure**, page 11.
2. Remove guard and SwitchTip from all guns.

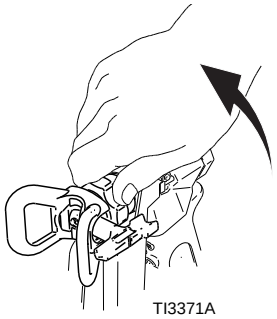

3. Unscrew cap, remove filter. Assemble without filter. Both for 200DC.

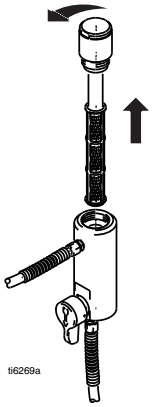

4. Clean filter, guard and SwitchTip in flushing fluid.

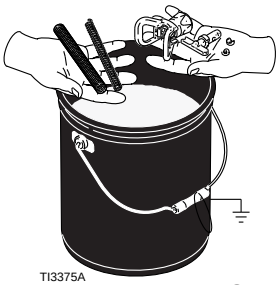

FLUSH

5. Place siphon tube set in grounded metal pail partially filled with flushing fluid. Attach ground wire to true earth ground. Perform **Startup** steps 10 - 17 (see page 13) to flush out paint in sprayer. Use water to flush water-base paint and mineral spirits solvent (also called white spirit) to flush oil-base paint. Perform this step for both pumps for 200DC sprayers.
6. Hold gun against paint bucket and pull trigger until water or solvent appears. Repeat for additional guns.

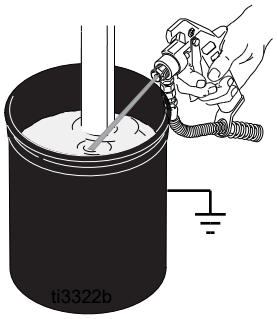

7. Move gun to solvent or water bucket. Hold gun against bucket and pull trigger until the system is thoroughly flushed. Repeat for additional guns.
8. Fill pump with Pump Armor, perform **Pressure Relief Procedure**, page 11, then reassemble filter, guard, and SwitchTip.
9. Each time you spray and store, fill throat packing nut with TSL to decrease packing wear.

Standard Series

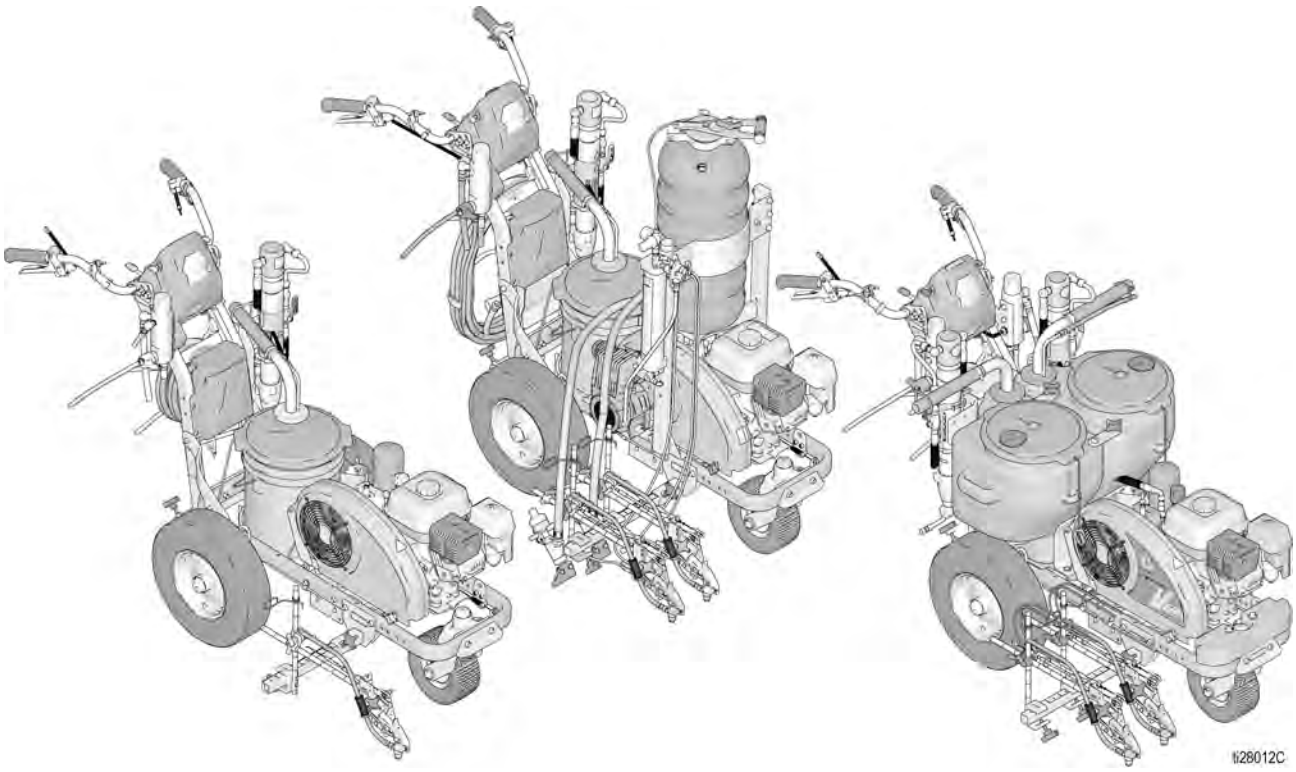

LineLazer V LiveLook Display

Standard Series

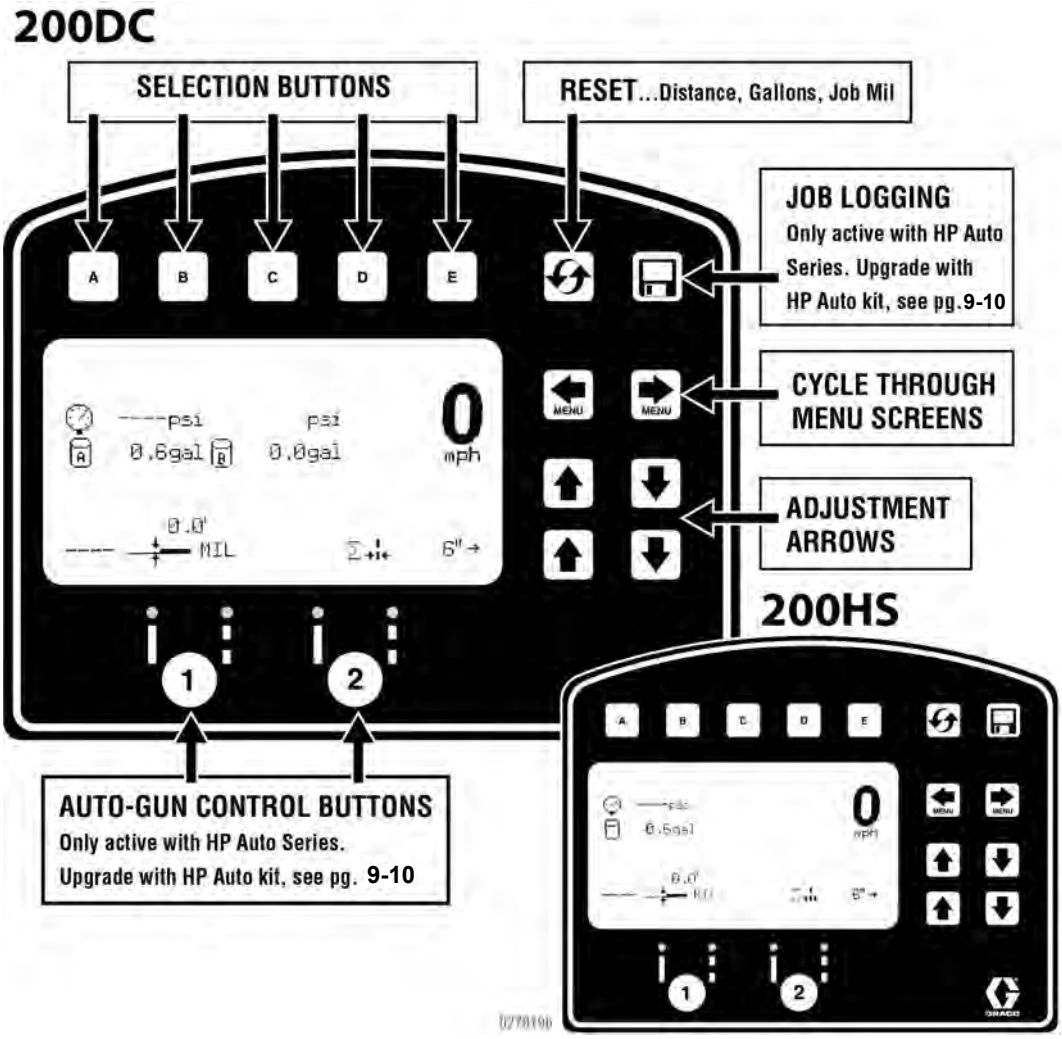

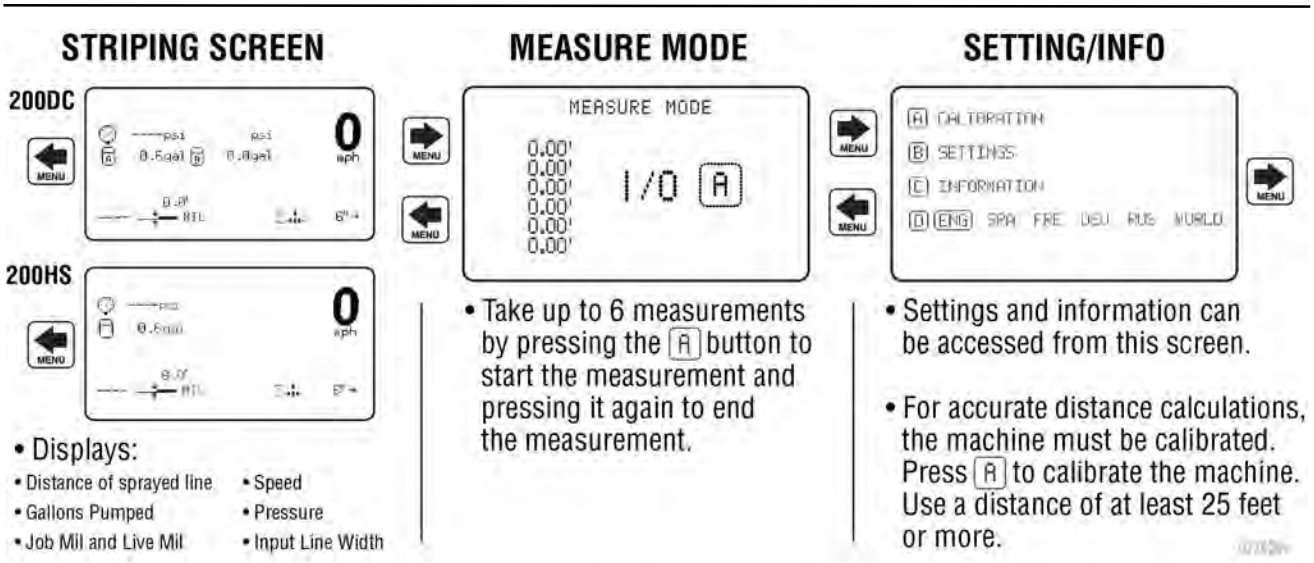

Initial Setup (Standard Series)

The initial setup prepares the striper for operation based on a number of user entered parameters. Language selections and the units of measure selections can be set before you start or changed later.

Language

From Setup/Information select appropriate language by pressing [D] until the language is outlined.

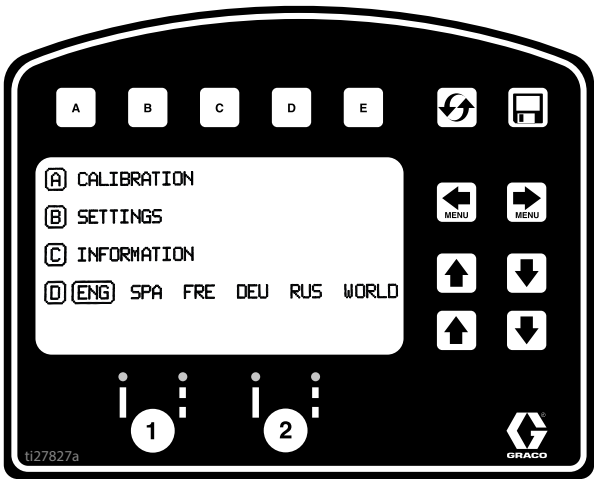

ENG = English
SPA = Spanish
FRE = French
DEU = German
RUS = Russian
WORLD = Symbols see **World Symbol Key**, page 61.

NOTE: Language can be changed later.

Units

Press [B] to enter settings and then [B] again to enter units. Select appropriate units of measure.

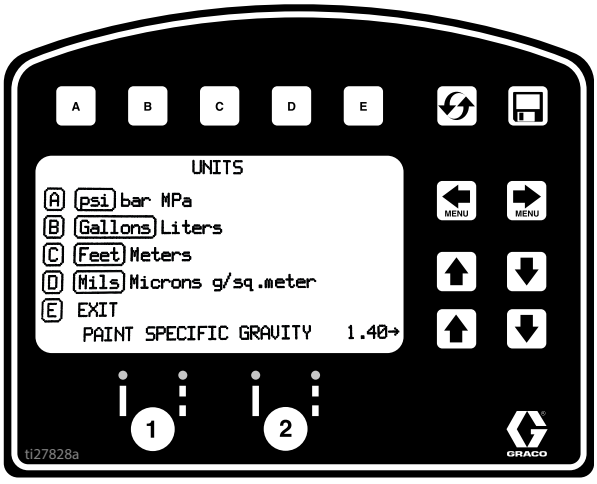

US Units
- Pressure = psi
- Volume = gallons
- Distance = feet
- Line Thickness = mil

SI Units
- Pressure = bar (MPa available)
- Volume = liters
- Distance = meters
- Line thickness = micron (g/m^2 available)

Paint Specific Gravity = Use UP and DOWN arrows to set specific gravity. Required to determine paint thickness.

NOTE: All units can be changed individually at any time.

Calibration

1. Check rear tire pressure 55 ± 5 psi (379 ± 34 kpa) and fill if necessary.
2. Extend steel tape to distance greater than 26 ft. (8m).

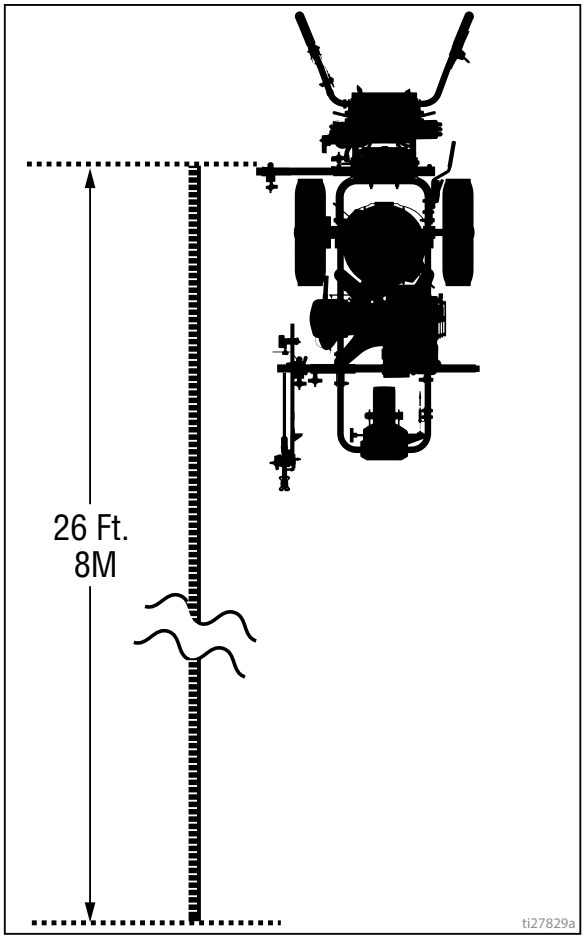

3. Press MENU MENU to select Setup/Information.

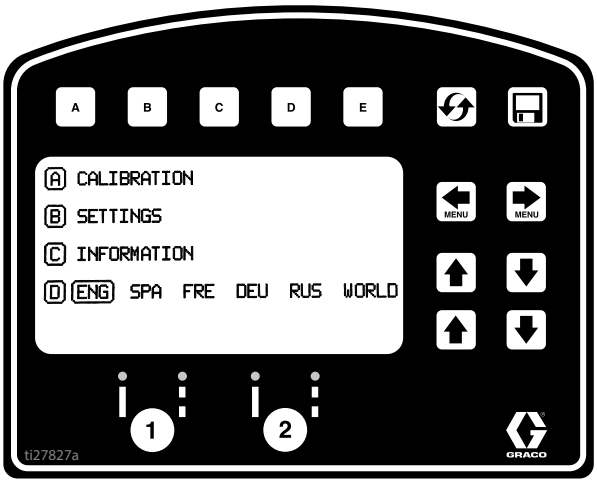

4. Press A for Calibration. Set TRAVEL DIST to 25 ft (7.6m) or longer. Longer distances ensure better1 accuracy, depending on conditions.

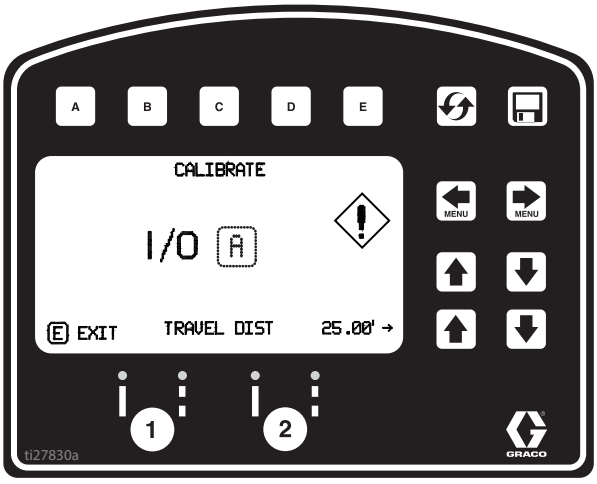

5. Align part of the unit with 1 foot (30.5cm) on steel tape.

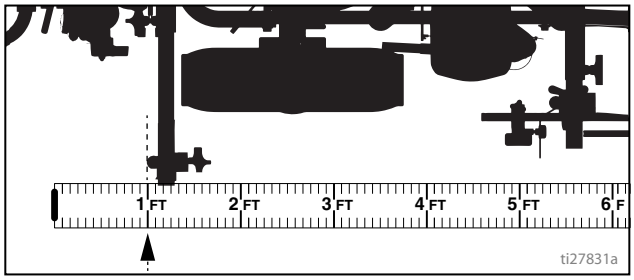

6. Push A to start calibration.

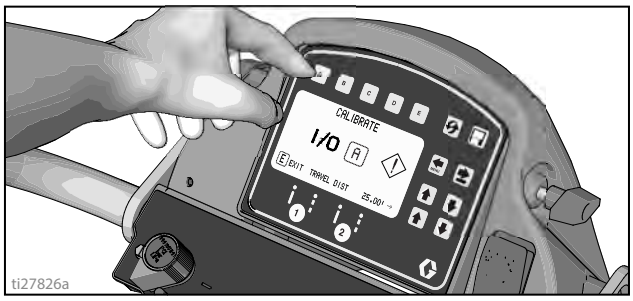

7. Move striper forward. Keep unit aligned with steel tape.

8. Stop when chosen part of unit aligns with 26-ft (8m), or distance entered, on steel tape (25-ft./ 7.6m distance).

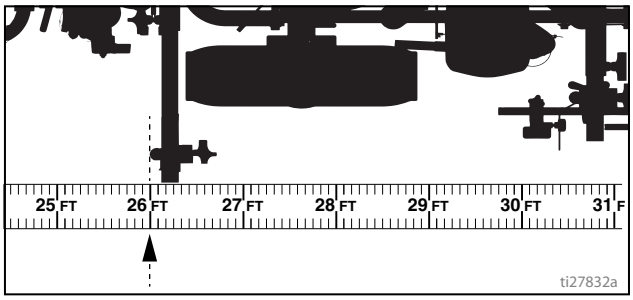

9. Push A to complete calibration.

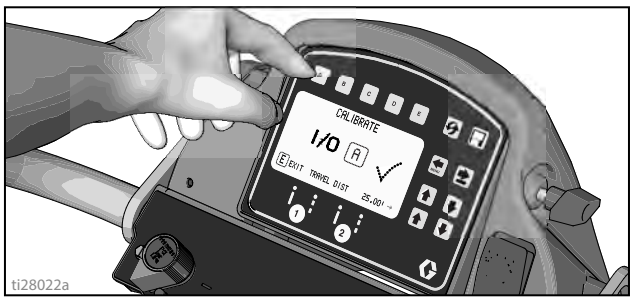

- Calibration is not complete when the exclamation symbol ⚠ is displayed.
- Calibration is finished when the check mark symbol ✓ is displayed.

10. Calibration is now complete.

Go to **Measure Mode (Standard Series)**, page 30, and verify accuracy by measuring the tape.

Striping Mode (Standard Series)

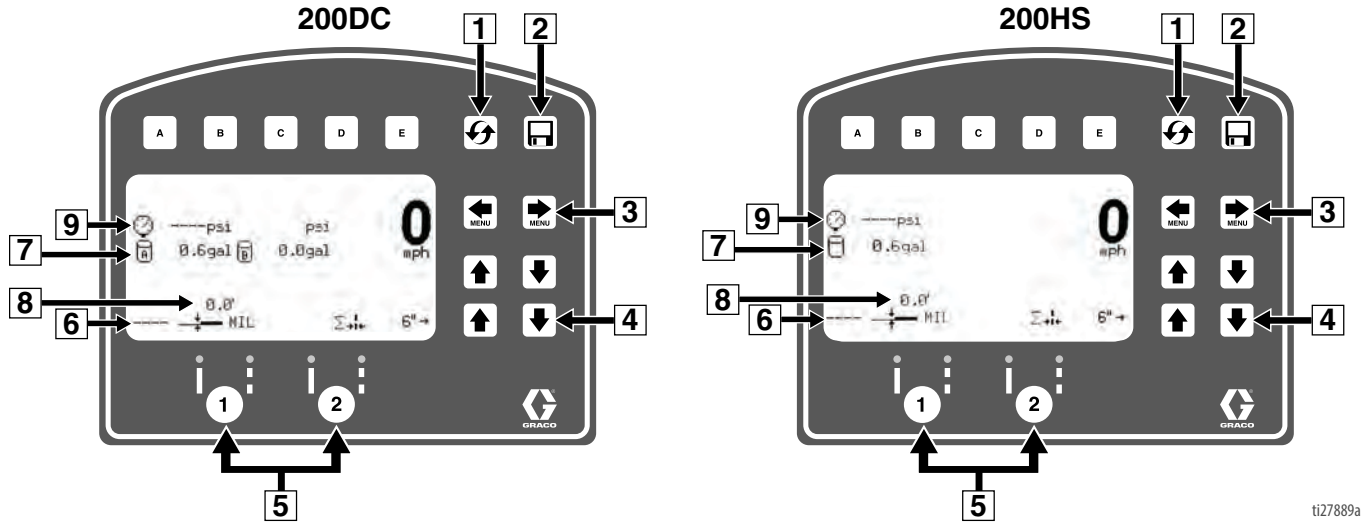

Ref.	Description
1	Resets Distance, Gallons, Mils
*2	Job logging
3	Scroll between menu screens
4	Line width adjustment buttons
*5	Auto gun buttons
6	MIL thickness. While spraying “Instant MIL avg” is displayed. When stopped total “Job MIL avg” is displayed.
7	Total gallons (liters) sprayed
8	Total line length sprayed.
9	Pressure

*Not active in Standard Series. Upgrade to HP Auto Series, see pages 9 - 10.

Operating in Striping Mode

1. Make sure engine is running.
2. Set pump switch to ON.

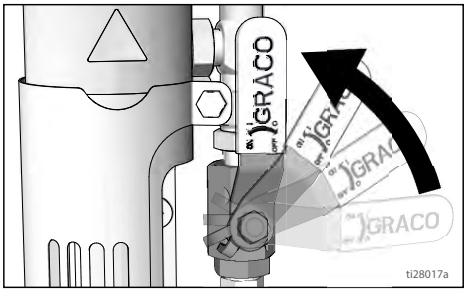

3. Pull trigger to spray.

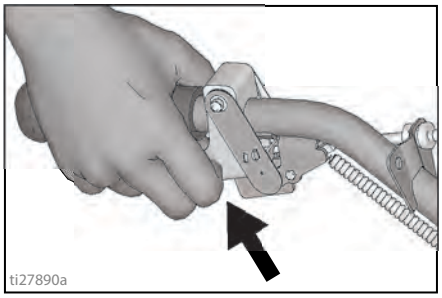

Measure Mode (Standard Series)

Measure Mode replaces a tape measure to measure distances when laying out an area to be striped.

1. Use [MENU] [MENU] to select Measure Mode.

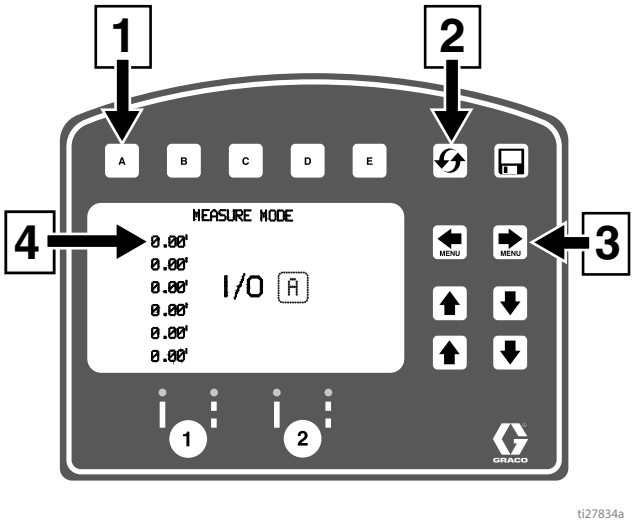

Ref.	Description
1	Press to start measurement, Press to stop measurement
2	Hold to reset values to zero
3	Scroll between main menu screens
4	Last measurement taken

2. Press and release [A]. Move striper forwards or backwards. (Moving backwards is a negative distance.)

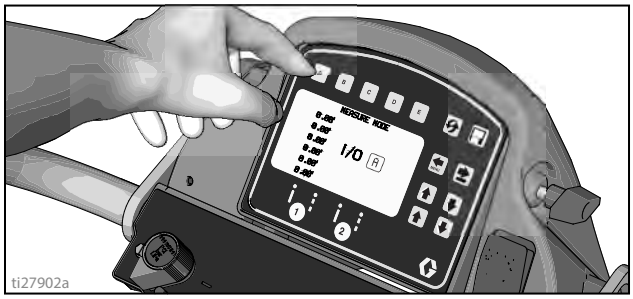

3. Press and release [A] to end measured length. Up to six lengths are viewable.

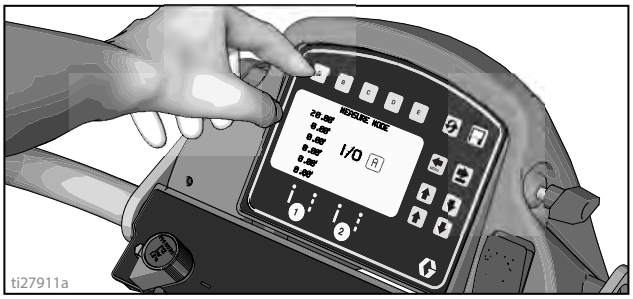

Setup/Information

Use [MENU] [MENU] to select Setup/Information.

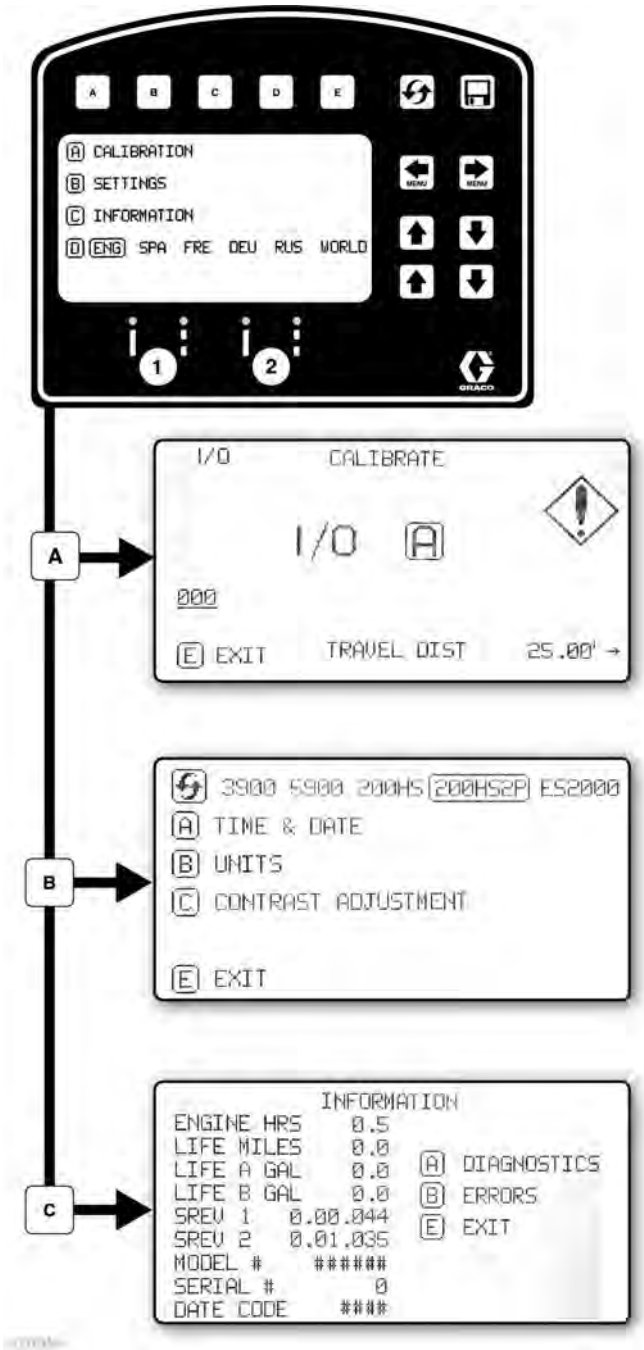

Press [D] to select Language.
See **Language**, page 27.

See **Calibration**, page 27.

See **Settings**, page 32.

See **Information**, page 33.

Settings

Use [MENU] [MENU] to select Setup/Information. Press [B] to open Settings Menu.

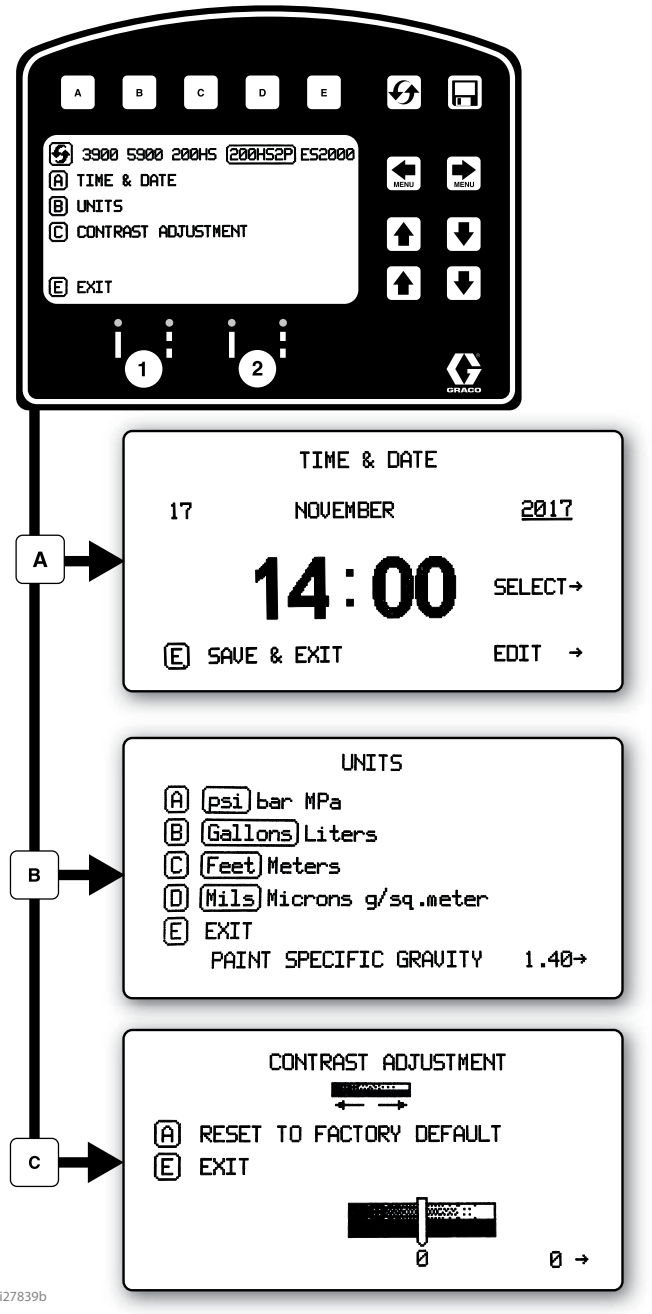

[Chooses the machine type. Necessary for accurate gallon counting.

Use [▲] [▼] [▲] [▼] to set time and date.

Set units with [A] [B] [C] [D]

Use [▲] [▼] to adjust screen contrast to the desired value.

Information

Use MENU MENU to select Setup/Information. Press C to open Information Menu.

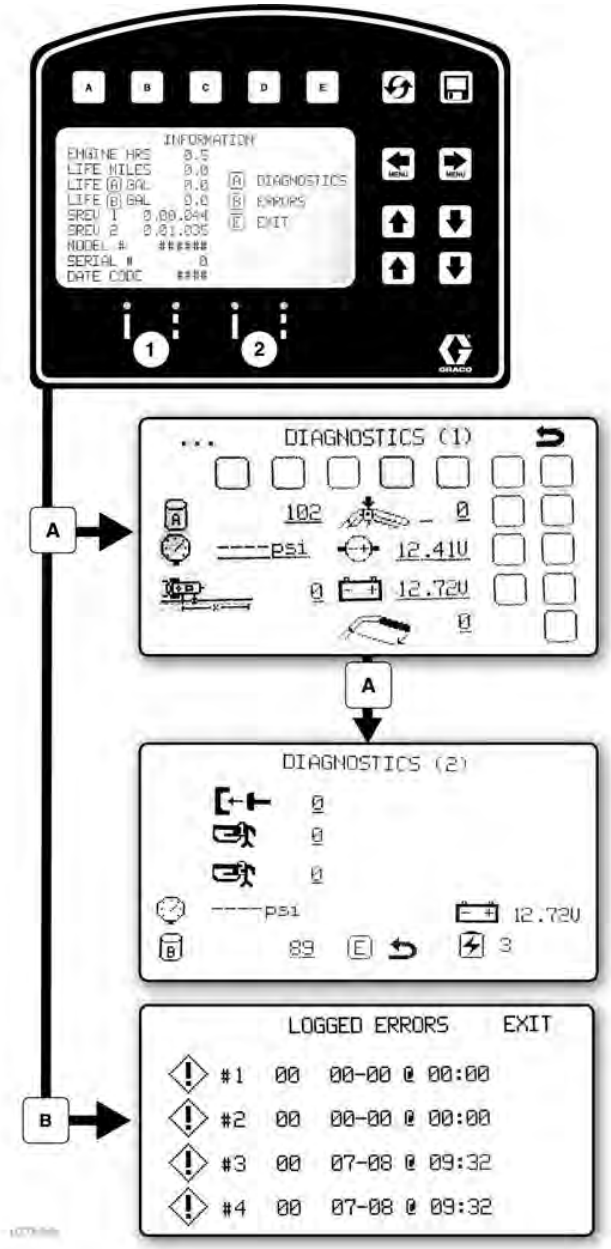

Displays and logs life data and striper information.

View and test functionality of components.

- Stroke Counter
- Touch Pad Buttons
- Pressure Transducer
- Engine Voltage
- Distance Sensor
- Battery Voltage

Logs last four error codes that occurred.

Code Description
02 = Over pressure
03 = No transducer detected

Reset error codes

HP Auto Series and HP Reflective Series

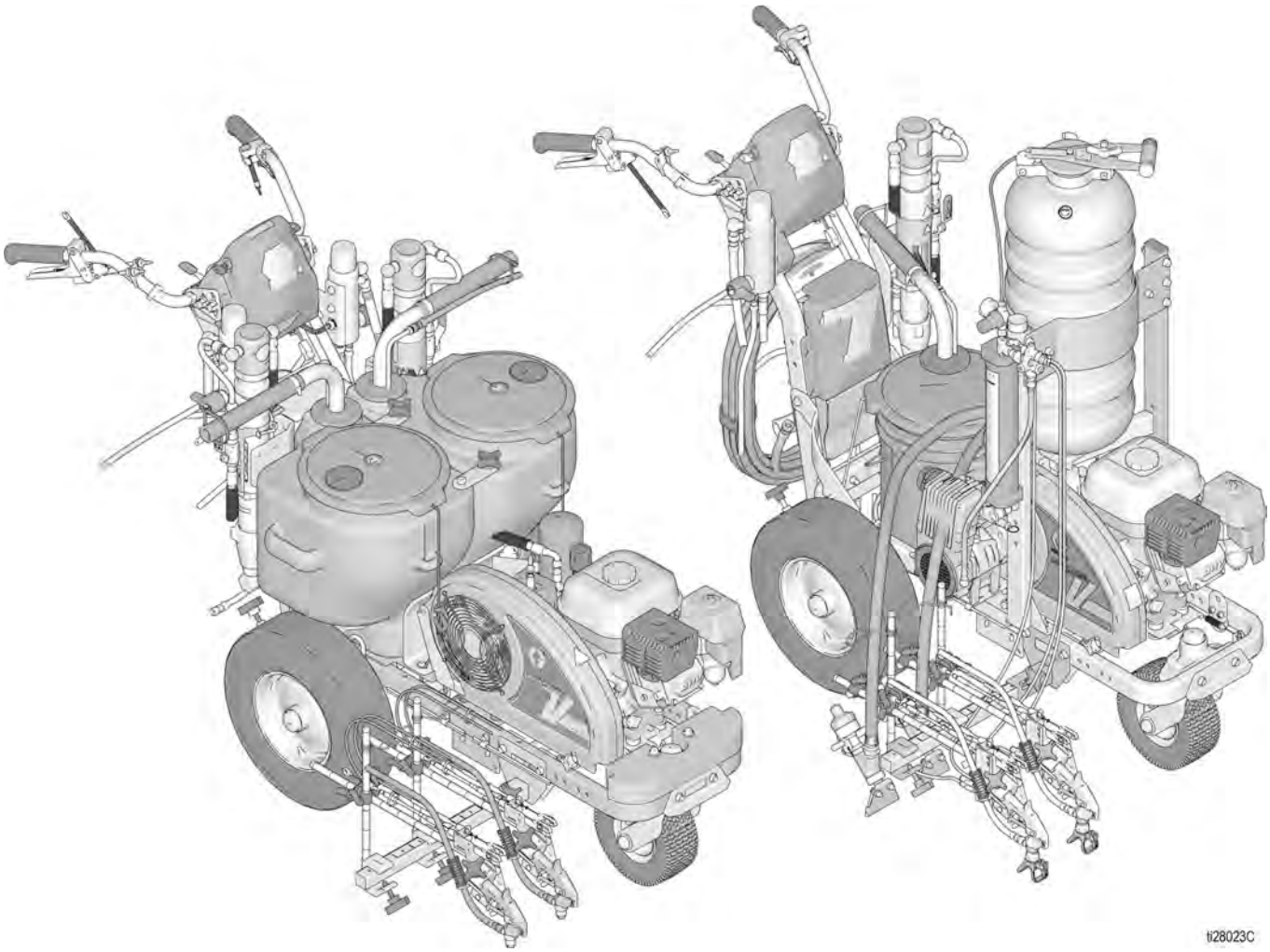

LineLazer V LiveLook Display

HP Auto Series

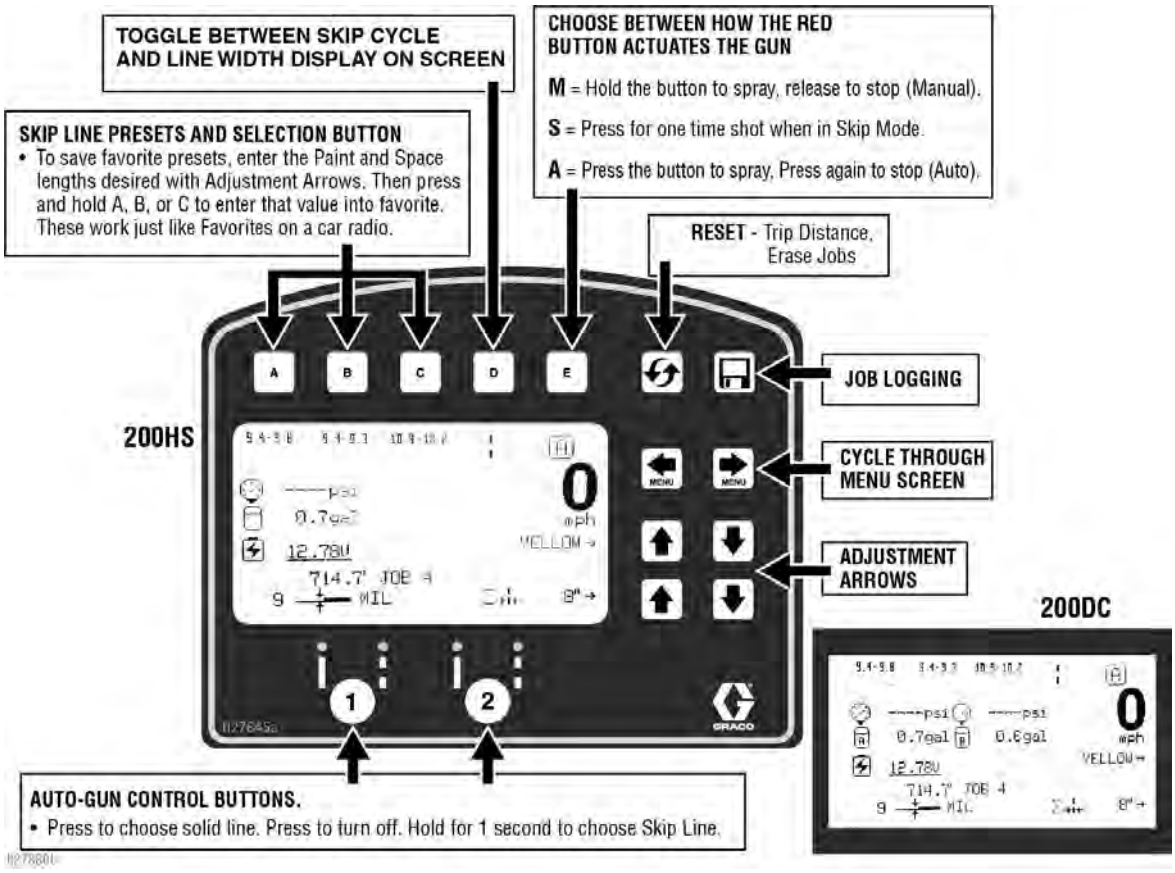

STRIPING SCREEN

200DC

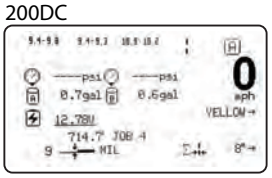

200HS

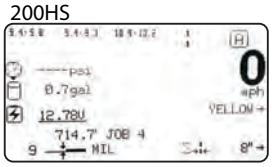

- **Main striping screen.** Must be in this mode to electronically actuate guns.
- Automatic Skip Cycles can be laid from this screen. Choose skip line on the desired gun to fire. Enter the Paint and Space distance wanted and begin spraying.
- Press the E Button to choose how the red button actuates the guns.

M = Hold to spray, release to stop

S = Press for one time shot when in Skip Mode.

A = Press to start , press to stop

MEASURE MODE

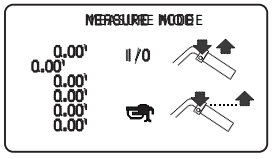

- **Measure Mode.** Ability to take up to 6 measurements by pressing the red button to start the measurement and pressing it again to end the measurement.
- If an Auto Gun is selected (see below) and the red button is held down, a dot will be dropped every 12" until the red button is released.

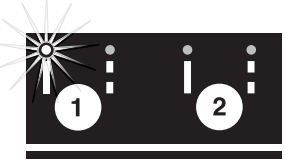

ti27879b

LAYOUT MODE

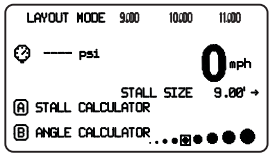

- **Layout Mode.** Drop a dot at a chosen distance to layout a parking lot.
- Enter stall size, active an auto gun, press the red button, and roll the machine. To stop dotting, press the red button again. Favorites can be saved just like in the main screen.

Ⓐ STALL CALCULATOR
see page 41

Ⓑ ANGLE CALCULATOR
see page 42

SETTING/INFO

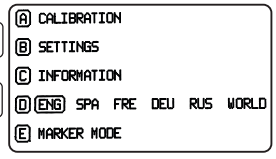

- Settings and Information can be accessed from this screen.
- For accurate distance calcula tions the machine must be calibrated. Press A to calibrate the machine. Use a distance of at least 25' or more.

Initial Setup (HP Auto Series)

The initial setup prepares the striper for operation based on a number of user entered parameters. Language selections and the units of measure selections can be set before you start or changed later.

Language

From Setup/Information select appropriate language by pressing [D] until the language is outlined.



ENG = English
SPA = Spanish
FRE = French
DEU = German
RUS = Russian
WORLD = Symbols see **World Symbol Key**, page 61.

NOTE: Language can be changed later.

Units

Press [B] to enter settings and then [B] again to enter units. Select appropriate units of measure.

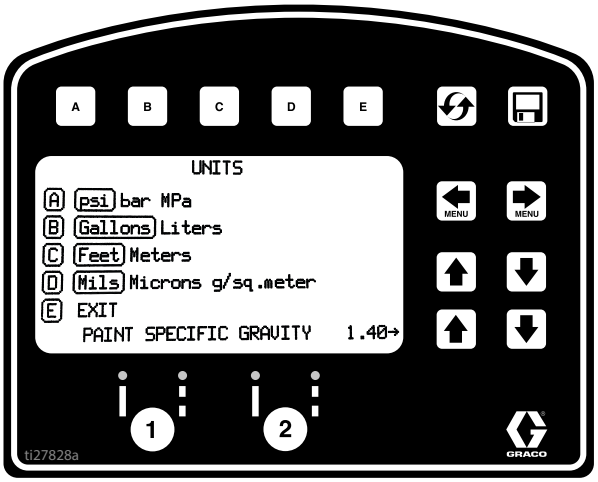

US Units
- Pressure = psi
- Volume = gallons
- Distance = feet
- Line Thickness = mil

SI Units
- Pressure = bar (MPa available)
- Volume = liters
- Distance = meters
- Line thickness = micron (g/m^2 available)

Paint Specific Gravity = Use UP and DOWN arrows to set specific gravity. Required to determine paint thickness.

NOTE: All units can be changed individually at any time.

Calibration

1. Check rear tire pressure 55 ± 5 psi (379 ± 34 kpa) and fill if necessary.
2. Extend steel tape to distance greater than 26 ft. (8m).

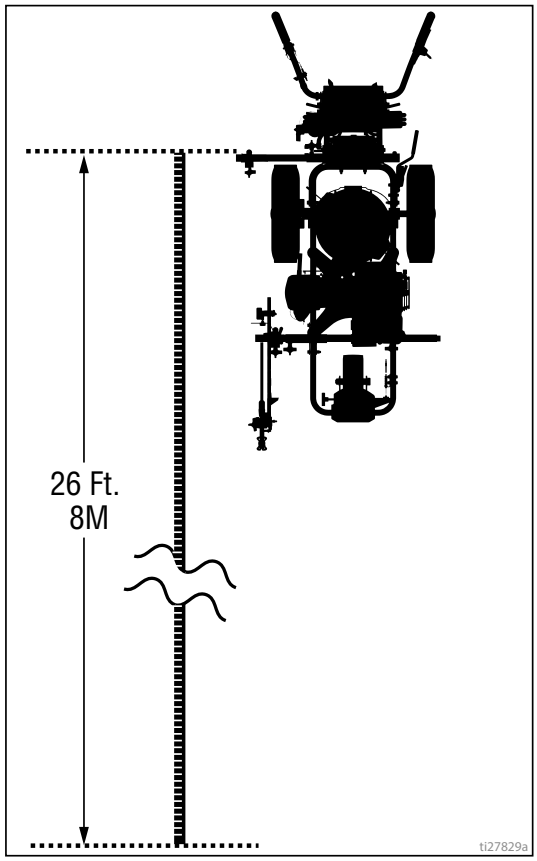

3. Press MENU MENU to select Setup/Information.



4. Press A for Calibration. Set TRAVEL DIST to 25 ft (7.6m) or longer. Longer distances ensure better accuracy, depending on conditions.

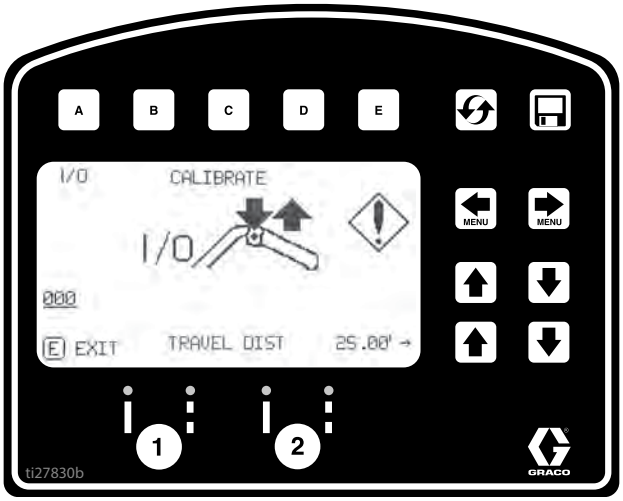

5. Turn on laser and align laser dot with 1 foot (30.5cm) on steel tape.

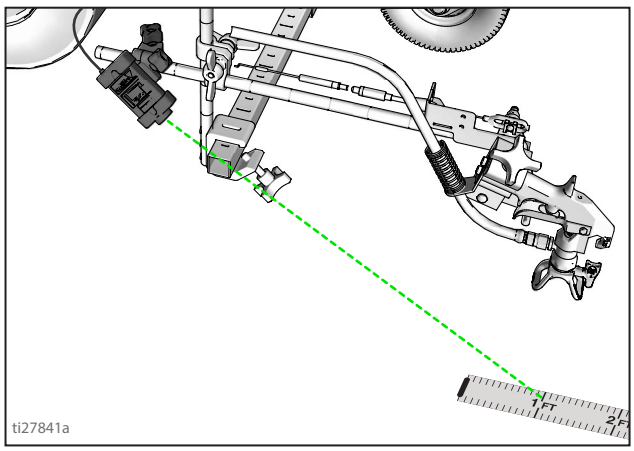

6. Press and release auto gun trigger control to start calibration.

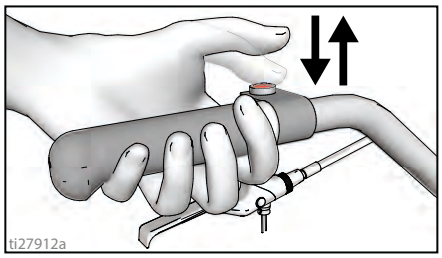

7. Move striper forward. Keep laser dot on steel tape.

8. Stop when laser aligns with 26-ft (8m) or distance entered on steel tape (25-ft./7.6m distance).

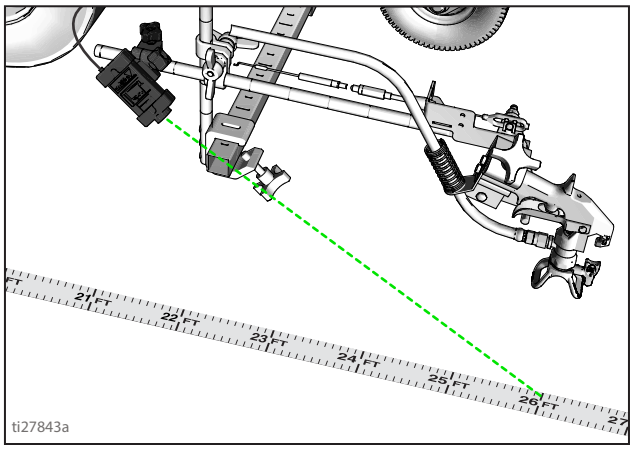

9. Press and release auto gun trigger control to complete calibration.

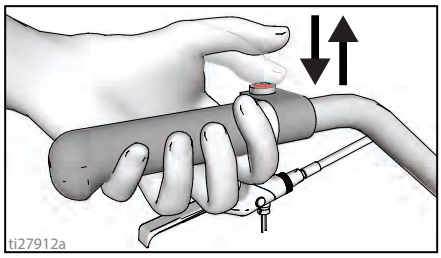

- Calibration is not complete when the exclamation symbol ⚠ is displayed.
- Calibration is finished when the check mark symbol ✓ is displayed.

10. Calibration is now complete.

Go to **Measure Mode (HP Auto Series)**, page 39, and verify accuracy by measuring the tape.

Striping Mode (HP Auto Series)

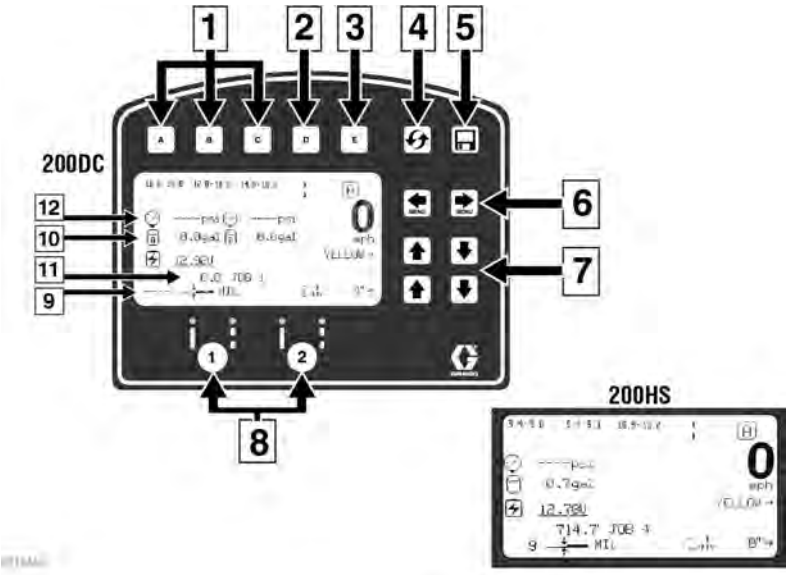

Ref.	Description
1	**Select** a “Favorite”, press for less than one second.
	Save a “Favorite”, press and hold for more than three seconds.
2	Cycles between viewing line width or paint and space value.
3	Cycles between Manual Mode, Semi-Automatic Mode, Automatic Mode.
	Manual Mode [M] **:** Press and hold gun trigger control to stripe.
	Semi-Automatic Mode [S] **:** Press and release gun trigger control to stripe the programmed length one time when in Skip Mode.
	Automatic Mode [A] **:** Press and release gun trigger control to start striping. Press and release button again to stop.
4	Resets trip distance.
5	Job Data Logger, page 48.
6	Scrolls between menu screens.
7	Paint and Space length **OR** line width adjustment buttons.
8	Auto guns activation buttons.
9	MIL thickness. While spraying “Instant MIL avg” is displayed. When stopped total “Job MIL avg” is displayed.
10	Total gallons (liters) sprayed.
11	Total line length sprayed.
12	Pressure

Operating in Striping Mode

Striper must be running before activating gun trigger control.

1. Make sure engine is running.
2. Use gun activation buttons to select guns and line type.

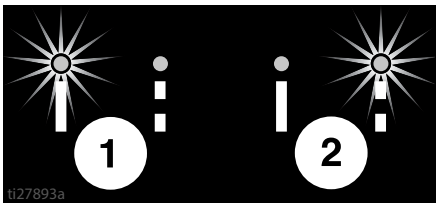

3. Press auto gun trigger control to begin spraying.

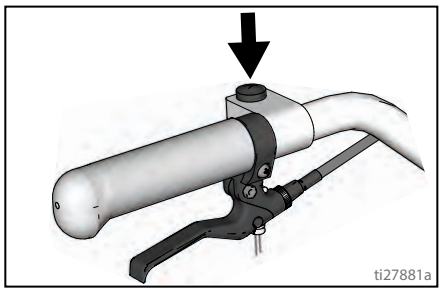

In Automatic Mode or Semi-Automatic Mode the [A] or [S] will flash when auto gun trigger control is pressed to signal mode is active.

Measure Mode (HP Auto Series)

Measure Mode replaces a tape measure to measure distances when laying out an area to be striped.

1. Use  to select Measure Mode.

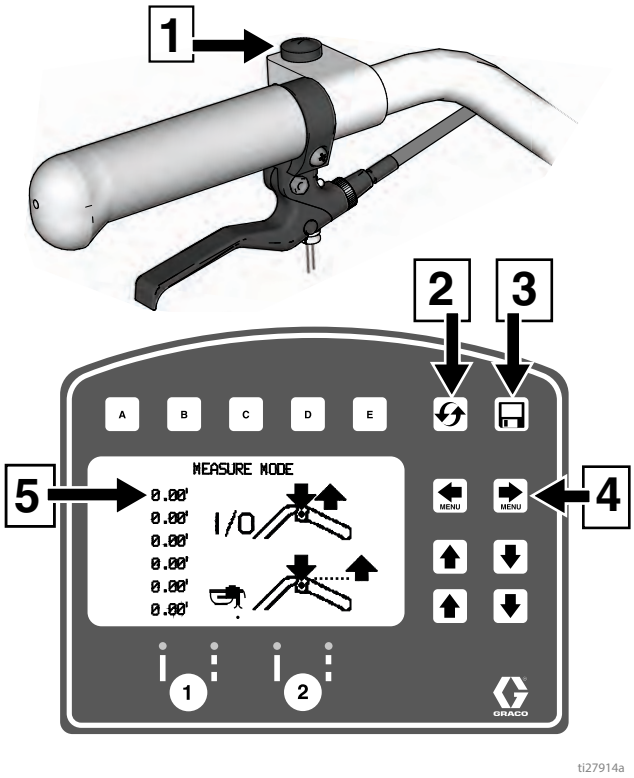

Ref.	Description
1	Press to start measurement, Press to stop measurement.
2	Hold to reset values to zero.
3	Job Data Logger, page 48.
4	Scroll between main menu screens
5	Last measurement taken

2. Press and release auto gun trigger control. Move striper forwards or backwards. (Moving backwards is a negative distance.)

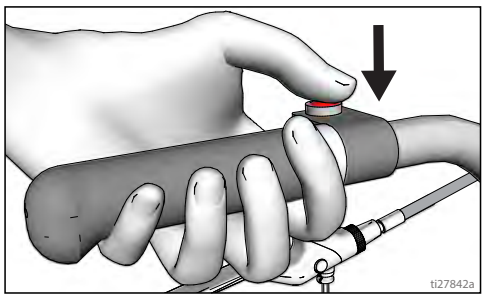

3. Press and release auto gun trigger control to end measured length. Up to six lengths are viewable.

The most recent measured length is also saved as the measured distance in the Stall Calculator display. See **Stall Calculator**, page 41.

If an auto gun is activated, press and hold gun trigger control at any time to apply a dot. If trigger is held while striper is moving, a dot is marked every 12-inches (30.5cm).

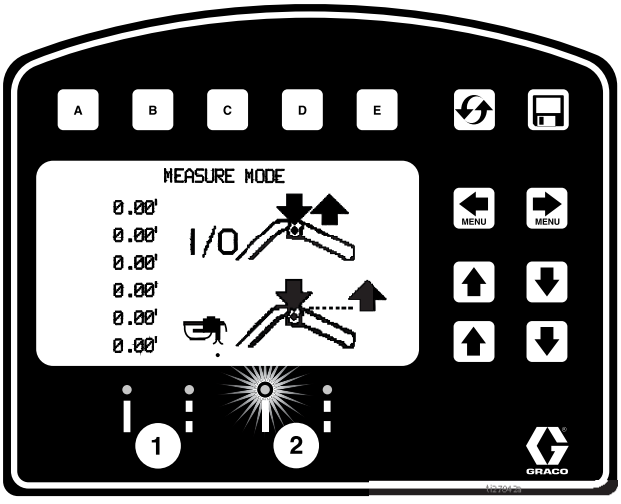

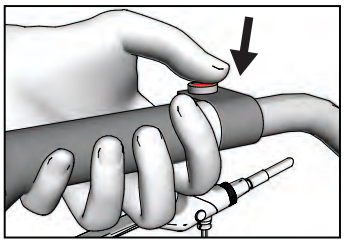

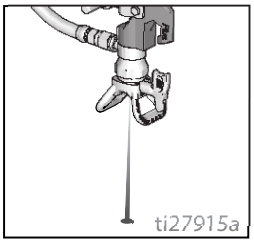

Layout Mode

Layout Mode is used to calculate and mark parking lot stalls.

1. Use MENU MENU to select Layout Mode.

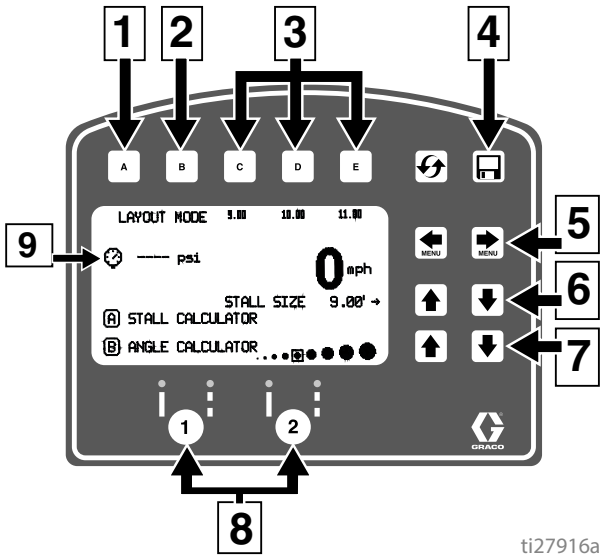

Ref.	Description
1	Opens Stall Calculator Menu. See **Stall Calculator**, page 41.
2	Opens Angle Calculator Menu. See **Angle Calculator**, page 42.
3	**Select** a “Favorite”, press for less than one second.
	Save a “Favorite”, press and hold for more than three seconds.
4	Job Data Logging, page 48.
5	Scroll between menu screens.
6	Adjust stall size/dot spacing.
7	Adjust dot size.
8	Auto Gun activation buttons.
9	Pressure.

2. Use gun activation buttons to select guns.

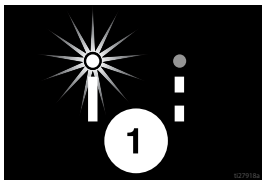

3. Press and release auto gun trigger control and move striper forward.

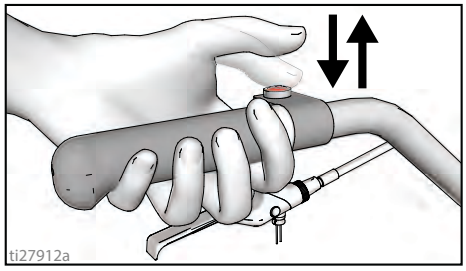

4. Striper default is to place a dot every 9.0 ft (2.7m) to mark the stall size. Stall size is adjustable.

5. Dots are laid down until gun trigger control is pressed and released again.

An indicator on the screen alternately flash when gun trigger control is pressed to signal mode is active.

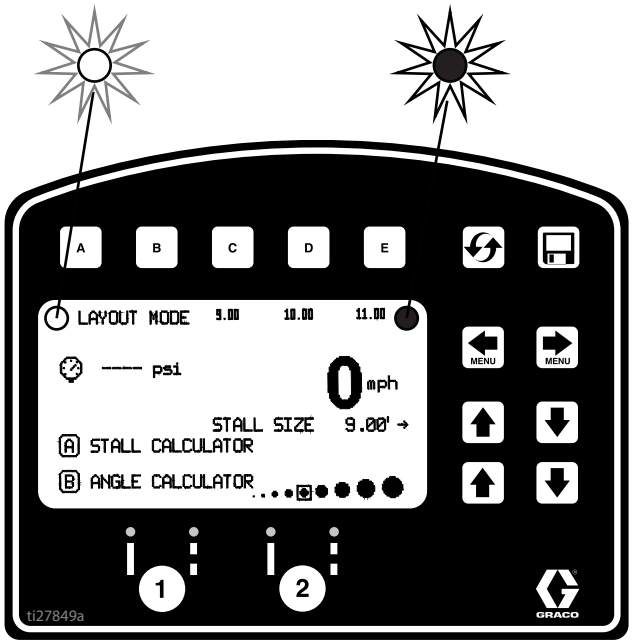

Stall Calculator

Stall Calculator is used to set the stall size. The striper divides the measured length by the stall size to determine the number of stalls that will fit in the length measured. User can adjust number of stalls to a round number and stall width is calculated.

1. Use [MENU] [MENU] to select Layout Mode. Press [A] to open Stall Calculator Menu.

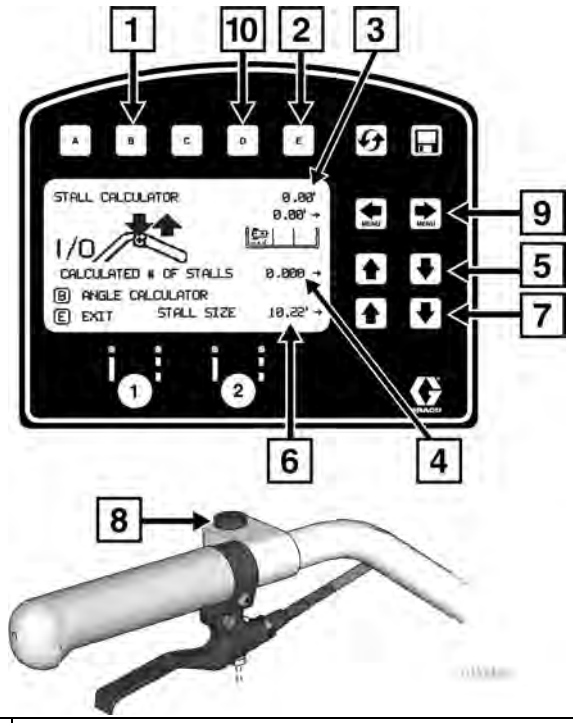

Ref.	Description
1	Opens Angle Calculator Menu. See **Angle Calculator**, page 42.
2	Exits and returns stall size to Layout Mode.
3	Measured distance.
4	Calculated # of stalls. Changing the number of stalls will change the stall size.
5	Adjusts number of stalls.
6	Stall size. Changing stall size changes the calculated # of stalls.
7	Adjusts stall size.
8	Press to start measurement, Press to stop measurement.
9	Adjusts Offset (x)
10	Stores Offset (x). Hold for 2 seconds to store value.

2. The most recent length measured in Measure Mode is automatically displayed. Press gun trigger control to start a new measurement. Press again to stop measuring.

   When measuring between curbs, the distance from the back tire/curb to the gun/laser dot, can be accounted for by setting the Offset (x) value.

   a. Back the striper up to the curb, then use a tape measure to measure from where the tire touches the curb to the laser dot on the ground.
   b. Use [MENU] [MENU] to enter the offset (x) value.
   c. This value can be stored by holding [D] for 2 seconds.
   d. The value stored under [D] can be added to the measured distance before or after the measurement is taken between the curbs.
   e. The offset (x) value can also be adjusted before or after the measurement is taken by using [MENU] [MENU].

   Stall size and calculated number of stalls are both adjustable.

3. Press [E] to return to Layout Mode. The Stall size is saved and displayed on the Layout Mode screen.

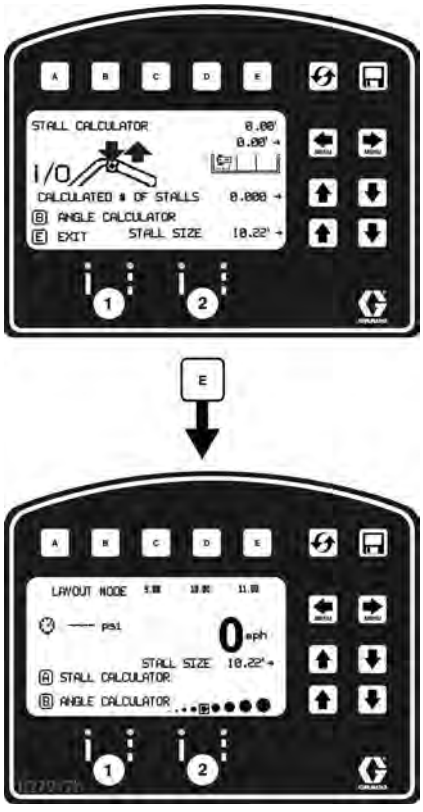

4. Press and release gun trigger control to start marking dots. Press and release gun trigger control again to stop.

Angle Calculator

Angle Calculator is used to determine the offset value and dot spacing value for a layout.

1. Use MENU MENU to select Layout Mode. Press B to open Angle Calculator Menu.

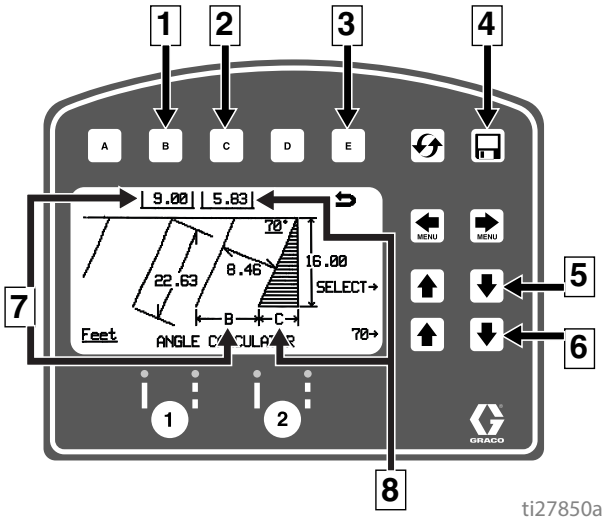

Ref.	Description
1	Transfers calculated dot spacing, B, to Layout Mode.
2	Transfers calculated off set, C, to Layout Mode.
3	Exits and returns to Layout Mode without transferring any values.
4	Data Logging.
5	Select input variables.
6	Adjust the variable selected.
7	Calculated dot spacing, B.
8	Calculated off set, C.

2. Dot spacing (B) and offset (C) are calculated based on the parameters entered:

   Stall angle
   Stall depth
   Stall size (width)
   Line Length

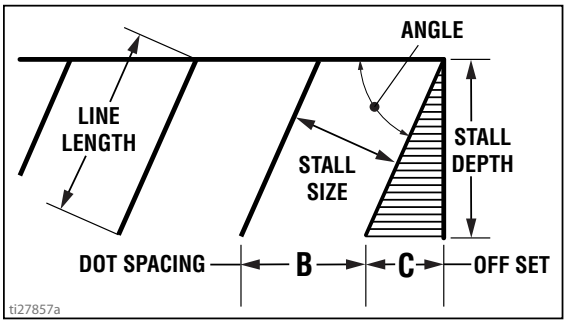

3. Press C to transfer calculated off set distance to Layout Mode. Save this value in favorites if desired.

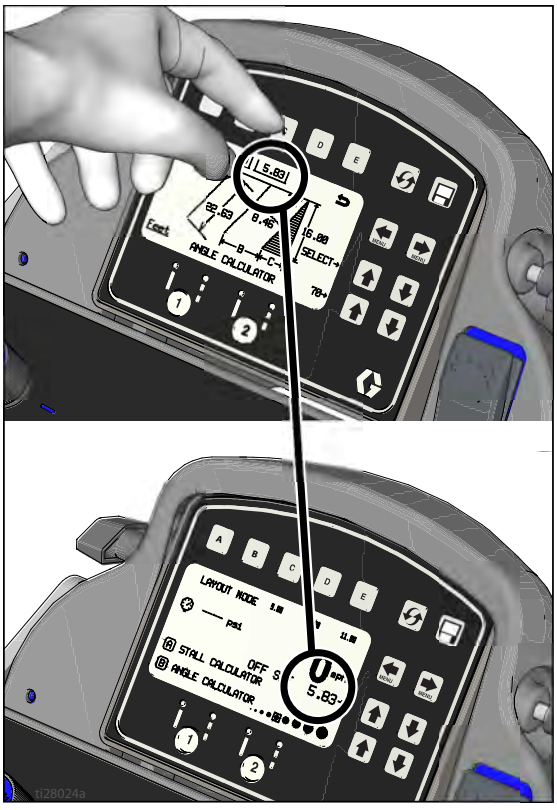

4. Press B to transfer calculated dot spacing distance to Layout Mode. Save this value in favorites if desired.

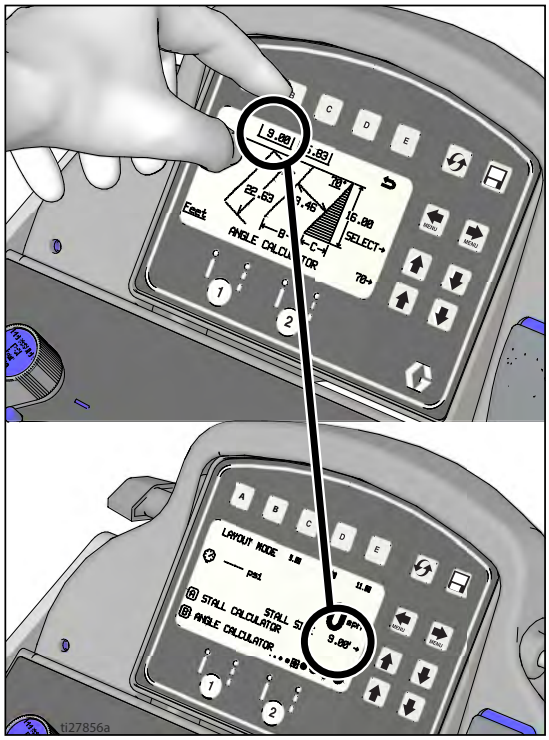

5. Press and release auto gun trigger control to start marking stall size dots. Press and release gun trigger control to stop marking.

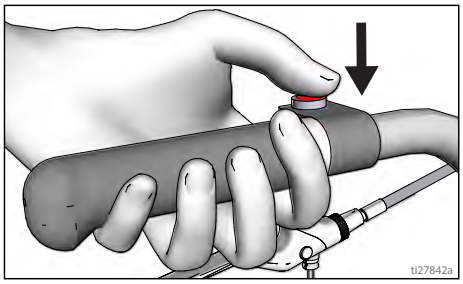

Setup/Information

Use MENU MENU to select Setup/Information.

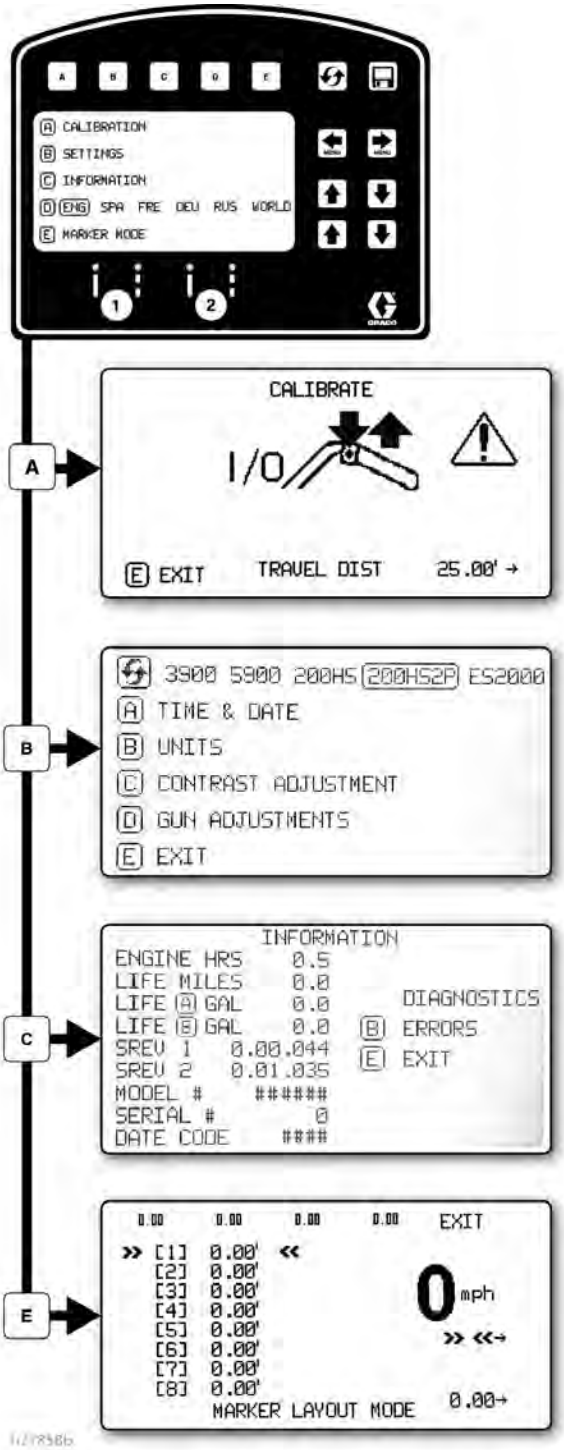

Press D to select Language.
See **Language**, page 36.

See **Calibration**, page 36.

See **Settings**, page 45.

See **Information**, page 46.

See **Marker Layout Mode**, page 47.

Settings

Use [MENU] [MENU] to select Setup/Information. Press [B] to open Settings Menu.

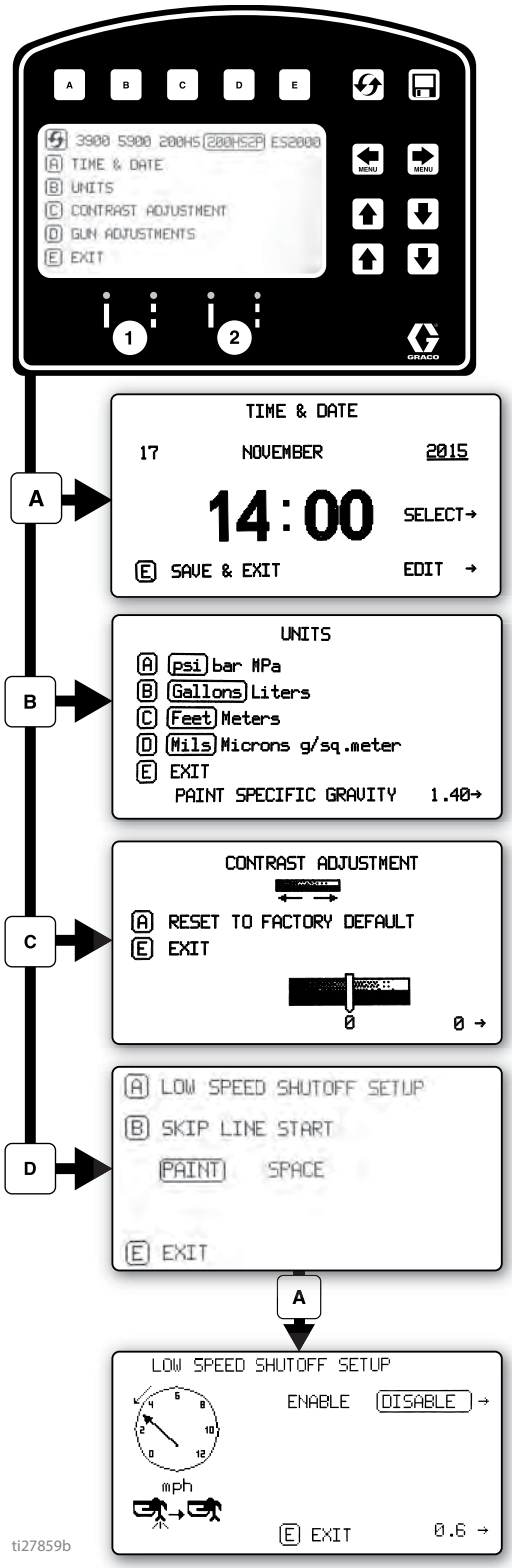

[Chooses the machine type.] Necessary for accurate gallon counting.

Use [▲▼▲▼] to set time and date. Needed for accurate Data Logging.

Set units with [A] [B] [C] [D]

Use [▲▼] to adjust screen contrast to the desired value.

For programmed skip lines, press [B] to choose:

Paint first **or** **Space first**

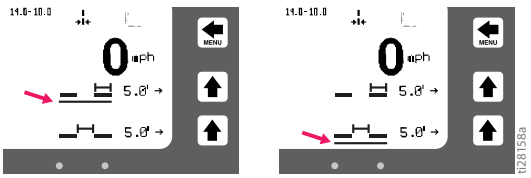

In Auto-mode, guns won't fire or will shut off if speed is below set value.

[MENU] [MENU] Enable or Disable Low Speed Shutoff

[▲▼] Adjust low speed setting.

Information

Use [MENU] [MENU] to select Setup/Information. Press [C] to open Information Menu.

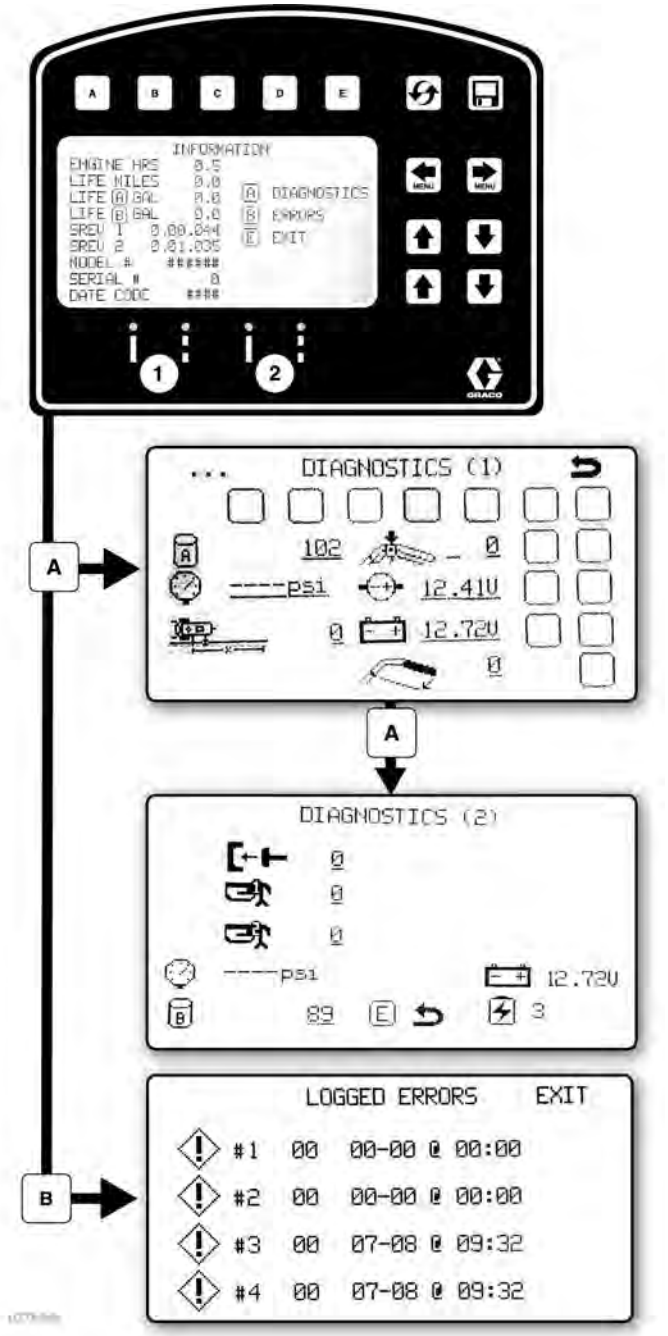

Displays and logs life data and striper information.

View and test functionality of component

- Stroke Counter
- Touch Pad Buttons
- Pressure Transducer
- Engine Voltage
- Distance Sensor
- Battery Voltage

- Clutch
- Solenoid 1
- Solenoid 2
- Battery charger state

Logs last four error codes that occurred.

Code Description
02 = Over pressure
03 = No transducer detected

Reset error codes

Marker Layout Mode

The Marker Layout Mode feature sprays a dot or a series of dots to mark an area.

1. Use MENU MENU to select Setup/Information. Press E to open Marker Layout Mode.

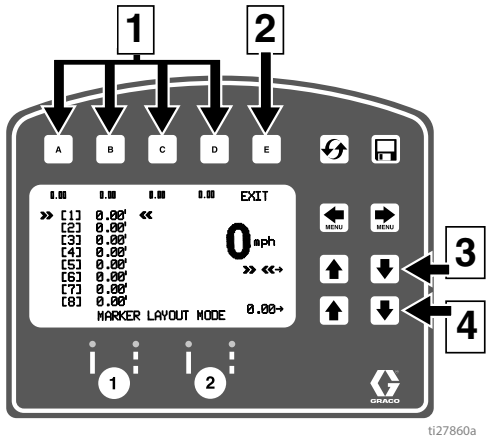

Ref.	Description
1	**Select** a “Favorite”, press for less than one second.
	Save a “Favorite”, press and hold for more than three seconds.
2	Exits and returns to Information Menu.
3	Select value to change.
4	Adjust spacing value.

2. Use arrow keys to set up a marker pattern.

3. Marker layout example shows a typical lane layout for reflective markers. Set space sizes up to eight consecutive measurements. By leaving zeros in any space, Marker Layout Mode will skip to the next measurement in a continuous loop.

   Some other uses of Marker Layout Mode are:
   - Multiple spaced handicap stall layout
   - Double line stalls

4. Set gun switch to skip line or solid line.

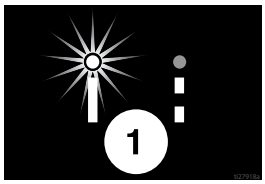

5. Press and release auto gun trigger control to start marking dots. Press and release auto gun trigger control again to stop.

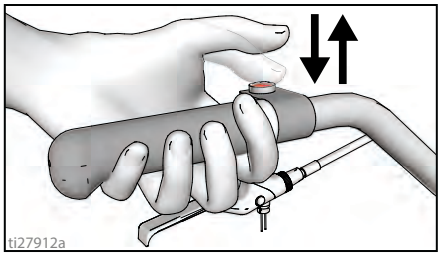

An indicator before and after Marker Mode on the screen alternately flash when gun trigger control is pressed to signal mode is active.

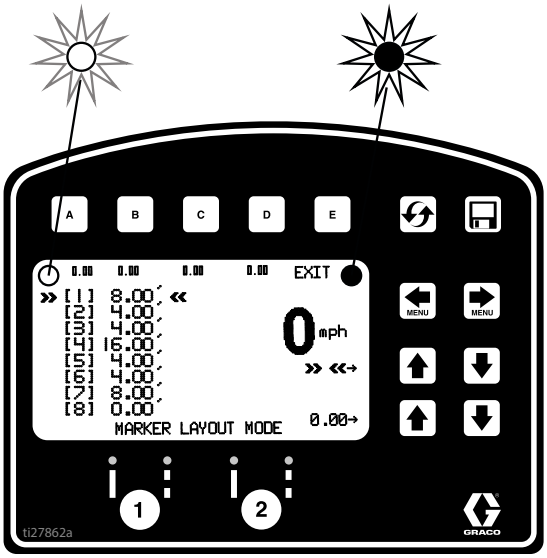

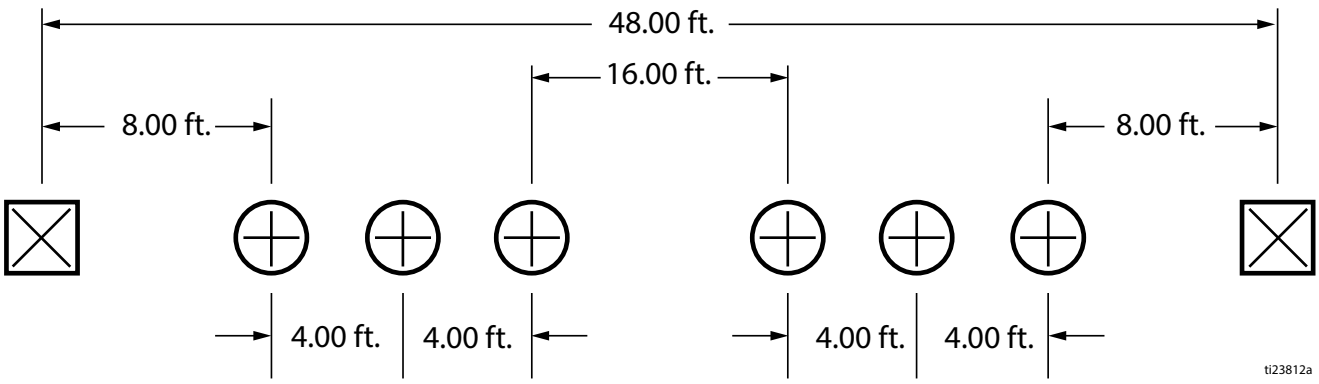

Data Logging

The LLV control is equipped with Data Logging, which allows the user to recall job data and export the data from the machine to a USB drive.

1. Press the to open the Data Logging pop up window.
2. Choose to start recording a new job or view jobs previously done.

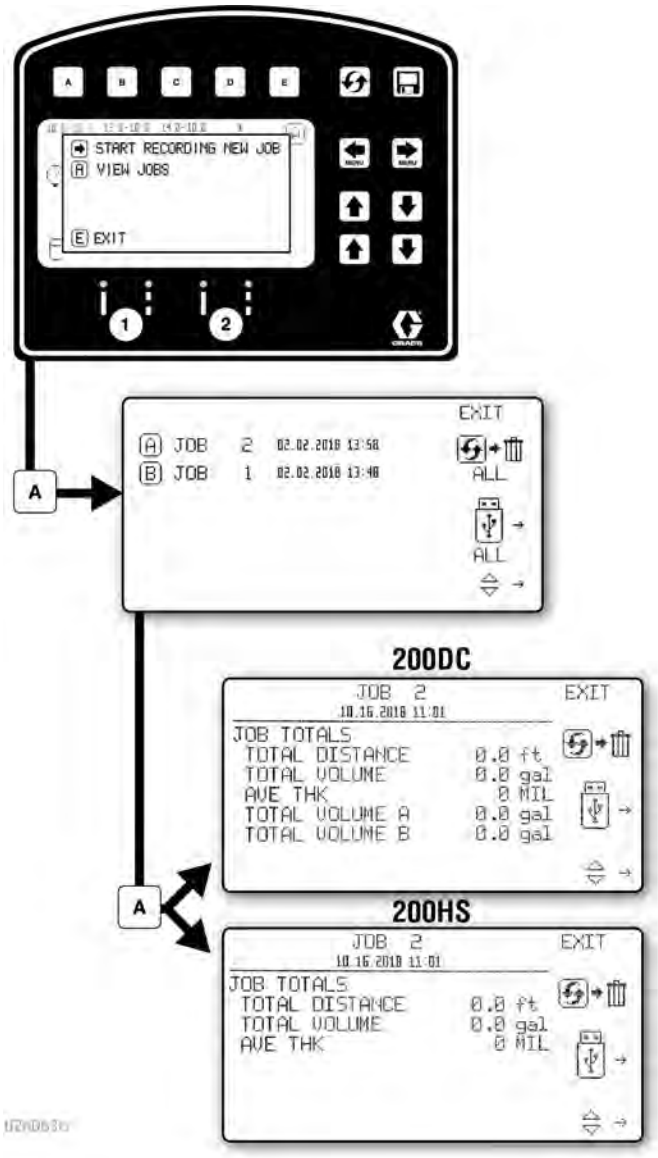

Start recording a new job.

Erase all jobs

Export all jobs to USB

Erase jobs

Export job to USB

Job data is compiled while spraying. A summary of volume sprayed, distance sprayed and average mil thickness is displayed for the entire job. The job is also broken down by colors, line widths and stencil volume sprayed.

Maintenance

Periodic Maintenance

DAILY: Check engine oil level and fill as necessary.

DAILY: Check hydraulic oil level and fill as necessary.

DAILY: Check hose for wear and damage.

DAILY: Check gun safety for proper operation.

DAILY: Check prime/spray drain valve for proper operation.

DAILY: Check and fill gas tank

DAILY: Check that displacement pump is tight.

DAILY: Top off TSL level in displacement pump packing nut to help prevent material buildup on piston rod and early wear of packing.

AFTER THE FIRST 20 HOURS OF OPERATION: Drain engine oil and refill with clean oil. Reference Honda Engines Owner's Manual for correct oil viscosity.

WEEKLY: Remove engine air filter cover and clean element replace, if necessary. If operating in an unusually dusty environment, check filter daily.

WEEKLY/DAILY: Remove any debris from hydraulic rod.

AFTER EACH 100 HOURS OF OPERATION: Change engine oil. Reference Honda Engines Owner's Manual for correct oil viscosity.

SEMI-ANNUALLY: Check belt wear, replace if necessary.

YEARLY OR 2000 HOURS: Replace belt.

AFTER EACH 500 HOURS OR 3 MONTHS OF OPERATION: Replace hydraulic oil and filter. Use only synthetic hydraulic oil, ISO 46 with a viscosity index (VI) of 154 or higher, and filter 246173. Oil change interval dependent on environmental conditions.

SPARK PLUG: Use only BPR6ES (NGK) or W20EPR--U (NIPPONDENSO) plug. Gap plug to 0.028 to 0.031 in (0.7 to 0.8 mm). Use spark plug wrench when installing and removing plug.

Caster Wheel

1. Once each year, tighten nut under dust cap until spring washer bottoms out, then back off the nut 1/2 to 3/4 turn.
2. Once each month, grease the wheel bearing.
3. Check pin for wear. If pin is worn out, there will be play in the caster wheel. Reverse or replace the pin as needed.
4. Check caster wheel alignment as necessary. To align; page 20.

Recycling and Disposal

Rechargeable Battery Disposal

Do not place batteries in the trash. Recycle batteries according to local regulations. In the USA and Canada, call 1-800-822-8837 to find recycling location or go to www.call2recycle.org.

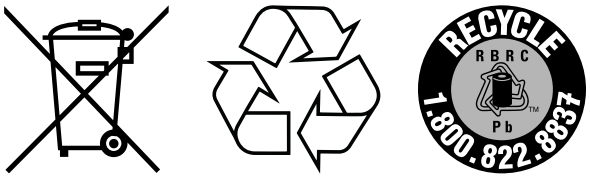

End of Product Life

At the end of the product's useful life, dismantle and recycle it in a responsible manner.

- Perform the **Pressure Relief Procedure**.
- Drain and dispose of fluids according to applicable regulations. Refer to the material manufacturer's Safety Data Sheet.
- Remove motors, batteries, circuit boards, LCDs (liquid crystal displays), and other electronic components. Recycle according to applicable regulations.
- Do not dispose of electronic components with household or commercial waste. 
- Deliver remaining product to a recycling facility.

Troubleshooting

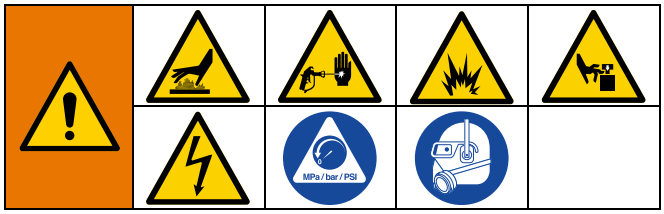

Problem	Cause	Solution
Gas engine pulls hard (won't start).	Hydraulic pressure is too high.	Turn hydraulic pressure knob counterclockwise to lowest setting.
Engine won't start.	Engine switch is OFF.	Turn engine switch ON.
	Engine is out of gas.	Refill gas tank. Honda Engines Owner's Manual.
	Engine oil level is low.	Try to start engine. Replenish oil, if necessary. Honda Engine Owner's Manual.
	Spark plug cable is disconnected or damaged.	Connect spark plug cable or replace spark plug.
	Cold engine.	Use choke.
	Fuel shutoff lever is OFF.	Move lever to ON position.
	Oil is seeping into combustion chamber.	Remove spark plug. Pull starter 3 to 4 times. Clean or replace spark plug. Start engine. Keep sprayer upright to avoid oil seepage.
Engine operates, but displacement pump does not operate.	Pump valve is OFF.	Turn pump valve ON.
	Pressure setting is too low.	Turn pressure adjusting knob clockwise to increase pressure.
	Fluid filter is dirty.	Clean filter.
	Tip or tip filter is clogged.	Clean tip or tip filter. See spray gun manual.
	Displacement pump piston rod is stuck due to dried paint.	Repair pump. See pump manual.
	Belt worn, broken or off pulley.	Replace.
	Hydraulic fluid too low.	Shut off sprayer. Add Hydraulic fluid.
	Hydraulic motor not shifting.	Set pump valve OFF. Turn pressure down. Turn engine OFF. Pry rod up or down until hydraulic motor shifts.
Displacement pump operates, but output is low on upstroke.	Piston ball is not seating.	Service piston ball. Manual 309277.
	Piston packings are worn or damaged.	Replace packings. Manual 309277.

Problem	Cause	Solution
Displacement pump operates but output is low on down stroke and/or on both strokes.	Strainer is clogged.	Clean strainer.
	O-ring in pump is worn or damaged.	Replace o-ring. See Pump manual 309277.
	Intake valve ball is packed with material or is not seating properly.	Clean intake valve. See Pump manual 309277.
	Engine speed is too low.	Increase throttle setting.
	Suction tube air leak.	Tighten suction tube.
	Pressure setting is too low.	Increase pressure.
	Fluid filter, tip filter or tip is clogged or dirty.	Clean filter.
	Large pressure drop in hose with heavy materials.	Use larger diameter hose and/or reduce overall length of hose. Use of more than 100 ft of 1/4 in. hose significantly reduces performance of sprayer. Use 3/8 in. hose for optimum performance (22 ft minimum).
Pump is difficult to prime.	Air in pump or hose.	Check and tighten all fluid connections. Reduce engine speed and cycle pump as slowly as possible during priming.
	Intake valve is leaking.	Clean intake valve. Be sure ball seat is not nicked or worn and that ball seats well. Reassemble valve.
	Pump packings are worn.	Replace pump packings. See Pump manual.
	Paint is too thick.	Thin the paint according to the supplier’s recommendations.
	Engine speed is too high.	Decrease throttle setting before priming pump.
High engine speed at no load.	Mis-adjusted throttle setting.	Reset throttle to 3700 - 3800 engine rpm at no load.
	Worn engine governor.	Replace or service engine governor.
Low stall or run pressure shown on display.	New pump or new packings.	Pump break-in period takes up to 100 gallons of material.
	Faulty transducer.	Replace transducer.
Excessive paint leakage into throat packing nut.	Throat packing nut is loose.	Remove throat packing nut spacer. Tighten throat packing nut just enough to stop leakage.
	Throat packings are worn or damaged.	Replace packings. See Pump manual 309277.
	Displacement rod is worn or damaged.	Replace rod. See Pump manual 309277.
Fluid is spitting from gun.	Air in pump or hose.	Check and tighten all fluid connections. Reprime pump.
	Tip is partially clogged.	Clear tip.
	Fluid supply is low or empty.	Refill fluid supply. Prime pump. Check fluid supply often to prevent running pump dry.

Problem	Cause	Solution
Excessive leakage around hydraulic motor piston rod wiper.	Piston rod seal worn or damaged.	Replace these parts.
Fluid delivery is low.	Pressure setting too low.	Increase pressure.
	Displacement pump outlet filter (if used) is dirty or clogged.	Clean filter.
	Intake line to pump inlet is not tight.	Tighten.
	Hydraulic motor is worn or damaged.	Bring sprayer to Graco distributor for repair.
	Large pressure drop in fluid hose.	Use larger diameter for shorter hose.
The sprayer overheats.	Paint buildup on hydraulic components.	Clean.
	Oil level is low.	Fill with ISO 46 synthetic oil.
Excessive hydraulic pump noise.	Low hydraulic fluid level.	Shut off sprayer. Add ISO 46 synthetic oil.
Gallon (liter) counter not adding fluid volume.	Fluid pressure not high enough.	Must be over 800 psi (55 bar) for counter to add.
	Broken or disconnected pump counter wire, both pumps.	Check wires and connections. Replace any broken wires
	Missing or damaged magnet.	Reposition or replace magnet on pump, see Parts manual (Pump parts) for magnet location.
	Bad sensor, both pumps.	Replace sensor.
Sprayer operates, but display does not.	Bad connection between control board and display.	Remove display and reconnect.
	Display damaged.	Replace display.
Distance not adding properly (Measure mode will be inaccurate and speed will be wrong).	Machine not calibrated.	Perform calibration procedure.
	Rear tire pressure is too low or too high.	Adjust tire pressure to 55 +/- 5 psi (380 +/- 34kPa).
	Gear teeth missing or damaged (right side when standing on platform).	Replace distance gear/wheel hub.
	Distance sensor is loose or broken.	Reconnect or replace sensor.
Mils not calculating or calculates wrong.	Distance sensor.	See “Distance counter not operating properly”.
	Gallon counter.	See “Gallon (liter) counter not adding fluid volume.”
	Line width not entered.	Set line width on main striping screen.
	Bad or damaged control board.	Replace control board.
	Wrong machine type selected.	See “settings” and choose correct machine type.
Fluid spray starts after spray icon is shown on display.	Interrupter (164) is improperly positioned.	Turn screw counterclockwise until spray icon synchronizes with fluid spray, page 20.
Spray icon does not show on display when fluid is sprayed.	Loose connector.	Check that 5-pin connector and reed switch are properly connected.
Spray icon is always shown on display.	Interrupter is improperly positioned.	Turn screw clockwise until spray icon is synchronized with fluid spray, page 20.
	Reed switch assembly is damaged.	Replace reed switch assembly.

Problem	Cause	Solution
AUTO GUN MODE		
Auto Gun won't actuate when the red button is pressed.	Gun is not activated.	Press the 1 or 2 button on control to activate a gun.
	Cable is not adjusted properly.	Adjust Cable to properly actuate gun trigger, page 21.
	Not on main striping screen.	Go to main striping screen on control to Actuate Auto Guns.
	Low Speed Shut off is enabled.	Disable Low Speed Shutoff, page 45.
	Battery Voltage is too low.	Check battery voltage on Diagnostic Screen, page 32, or with Volt meter. If below 11.5V, charge battery or replace battery.
	Cable is not adjusted properly.	Adjust Cable to properly actuate gun trigger, page 21.
	Red button is broken.	Test button functionality in Diagnostic screen, page 32, replace if broken.
	Auto Gun Cable is broken or extremely kinked resulting in too much drag.	Replace Auto Gun Cable.
	Solenoid wire is disconnected or broke.	Check Wiring Diagram, pages 57 & 59, repair or replace wires if necessary.
	Fuse to battery is removed or blown.	Check and replace fuse.
	Solenoid is jammed.	Spray Lubrication on solenoid plunger.
	Solenoid has failed.	Check resistance across solenoid wires. Resistance should be between .2 and .26 ohms. If it's not, replace solenoid.
	Control board has failed.	Replace Control board.
Line Spacing is not accurate	Wrong line pattern loaded.	Reload the correct pattern.
	Machine is out of calibration.	Calibrate the machine, page 36.
Battery won't stay charged.	Accessories are left on and drain the battery when unit is not running.	Turn off accessories when machine is not in use.
	Throttle is not set high enough.	Make sure engine is being ran above 3300 rpm NO LOAD for proper power supply.
	Power consumption from accessories is higher than engine output.	Reduce accessories or charge battery when necessary.
	Wiring is broken or disconnected.	Check Wiring Diagram, pages 57 & 59, repair or replace wires if necessary.
	Charger is not working.	Check Charging state in diagnostics, page 33, to see if charger is properly working. Replace Board.
Auto Gun won't shut off	Cable is kinked.	Repair or replace cable.
	Solenoid is jammed.	Lubricate solenoid plunger, Check for solenoid damage.
	Needle in gun is clogged.	Clean out gun.

Problem	Cause	Solution
LAYOUT MODE		
No dots or poor dots in Layout and Marking Mode.	Too small of Dot setting.	Increase Dot size, page 40.
	Gun is not activated.	Press the 1 or 2 button on control to activate a gun.
	Cable is not adjusted properly.	Adjust Cable to properly actuate gun trigger, page 21.
	Tip clog.	Clear tip or Replace tip.
	Battery voltage is too low.	Charge battery or replace battery.
	Pump is not on, or pressure is not set.	Turn on pump and increase pressure to a minimum of 200 psi.

Hydraulic Oil/Filter Change

Removal

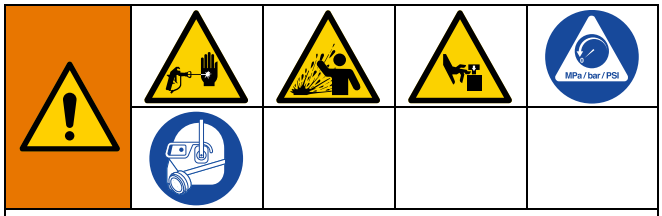

This equipment stays pressurized until pressure is manually relieved. To help prevent serious injury from pressurized fluid, such as skin injection, splashing fluid and moving parts, follow the Pressure Relief Procedure when you stop spraying and before cleaning, checking, or servicing the equipment.

1. Perform **Pressure Relief Procedure**, page 11.
2. Place drip pan or rags under sprayer to catch hydraulic oil that drains out.
3. Remove drain plug. Allow hydraulic oil to drain.
4. Unscrew filter slowly - oil runs into groove and drains out rear.

Installation

1. Apply a light film of oil on filter gasket. Install drain plug and oil filter. Tighten oil filter 3/4 turn after gasket contacts base.
2. Fill with five quarts of synthetic hydraulic oil, ISO 46 with a viscosity index (VI) of 154 or higher.
3. Check oil level.

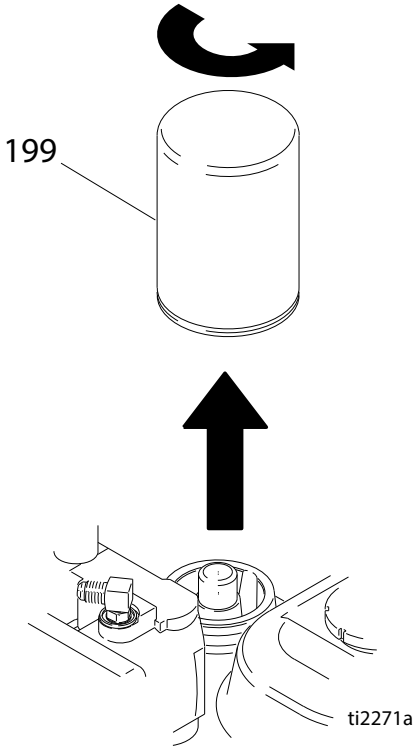

Wiring Diagram 200HS (Standard Series)

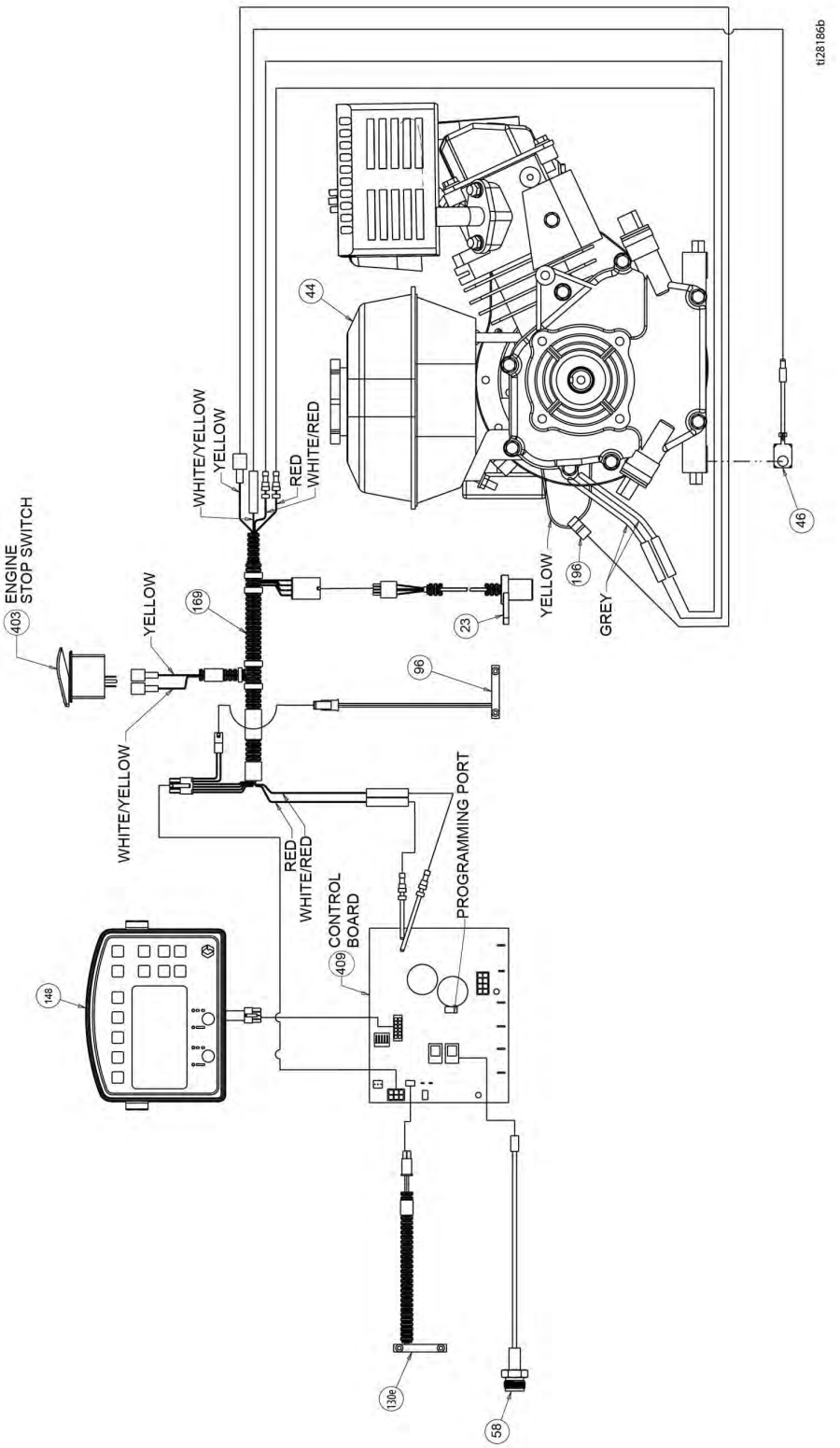

Wiring Diagram 200HS (HP Auto Series/HP Reflective Series)

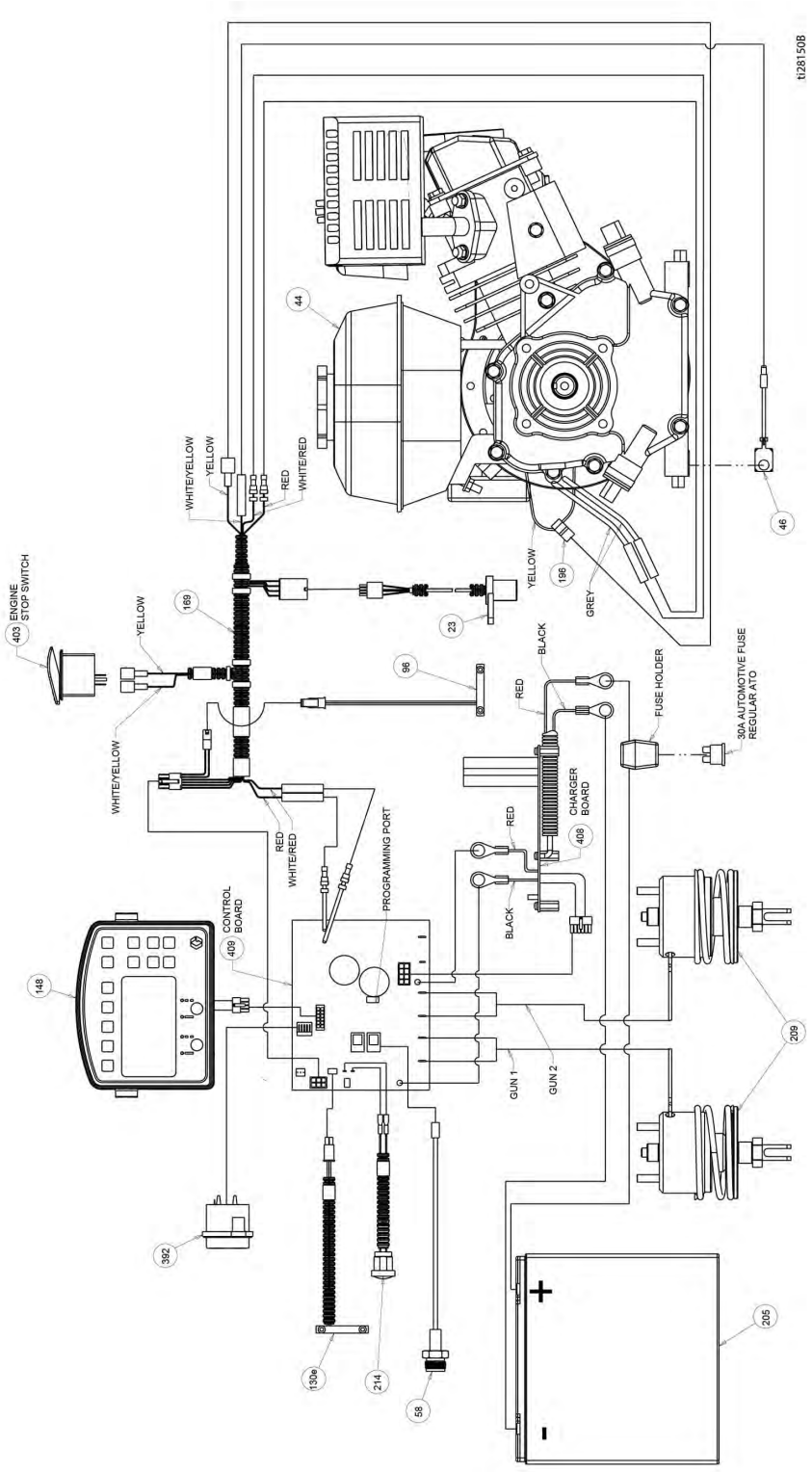

Wiring Diagram 200DC (Standard Series)

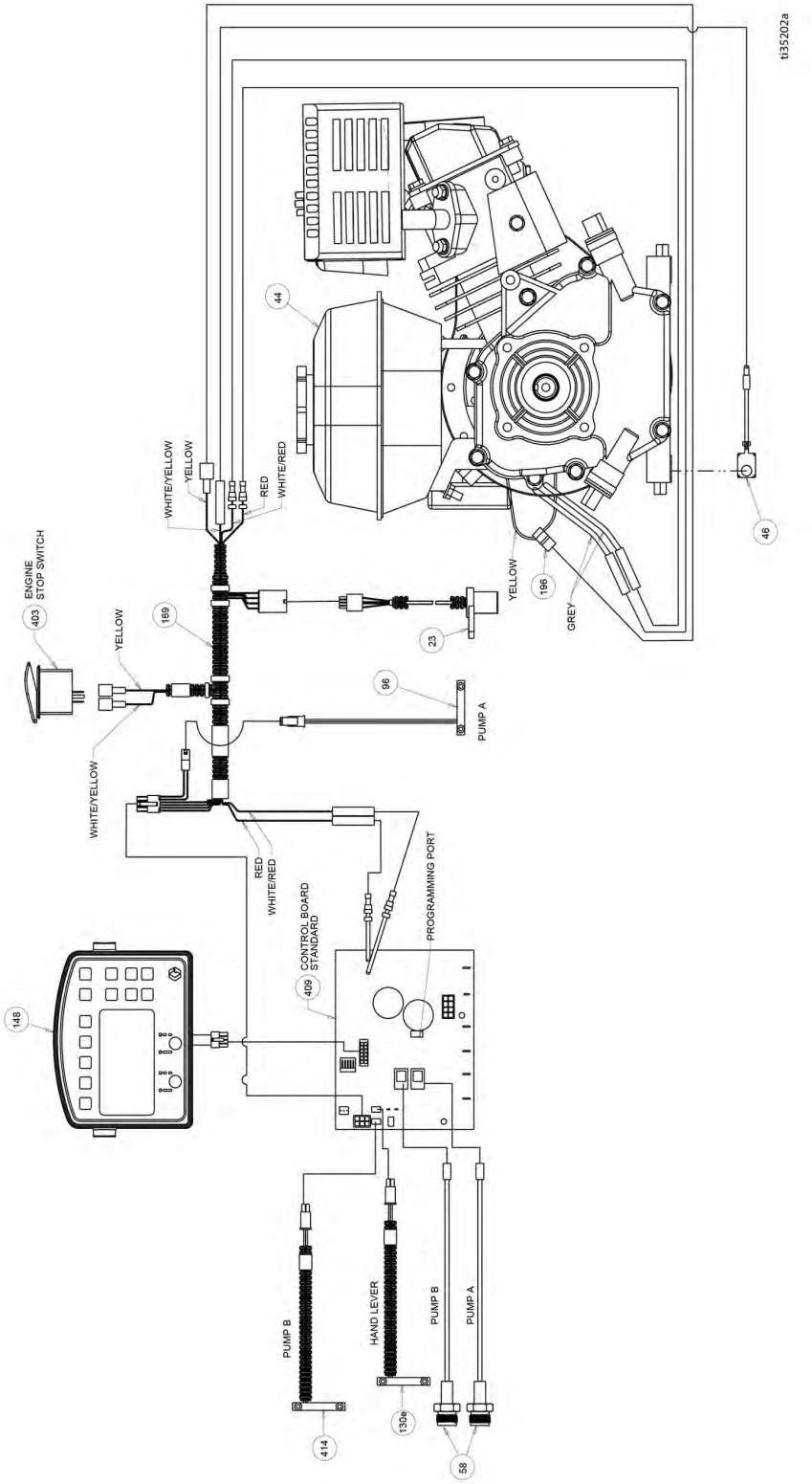

Wiring Diagram 200DC (HP Auto Series/HP Reflective Series)

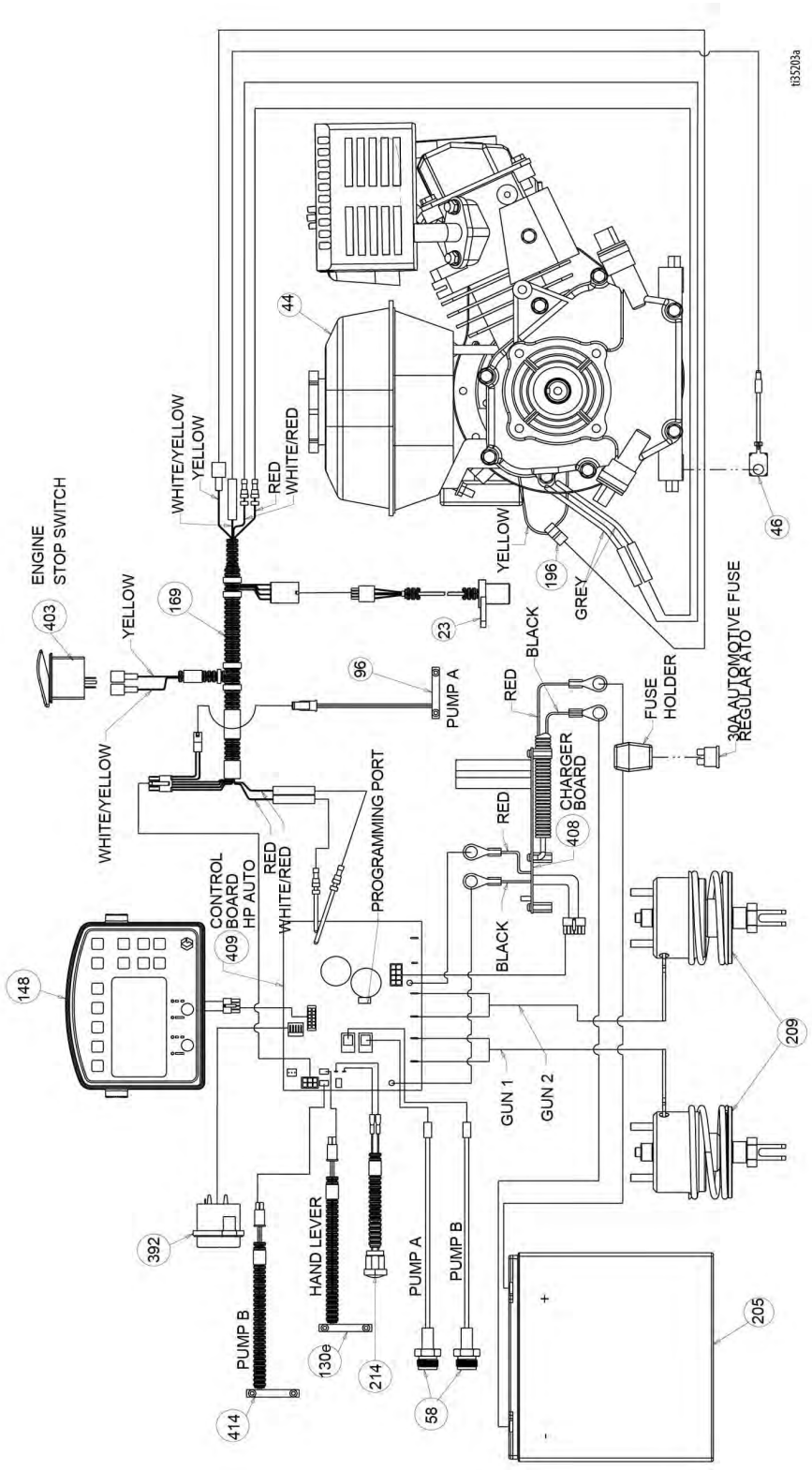

World Symbol Key

LLV GLOBAL SYMBOL KEY

MENU SCREENS

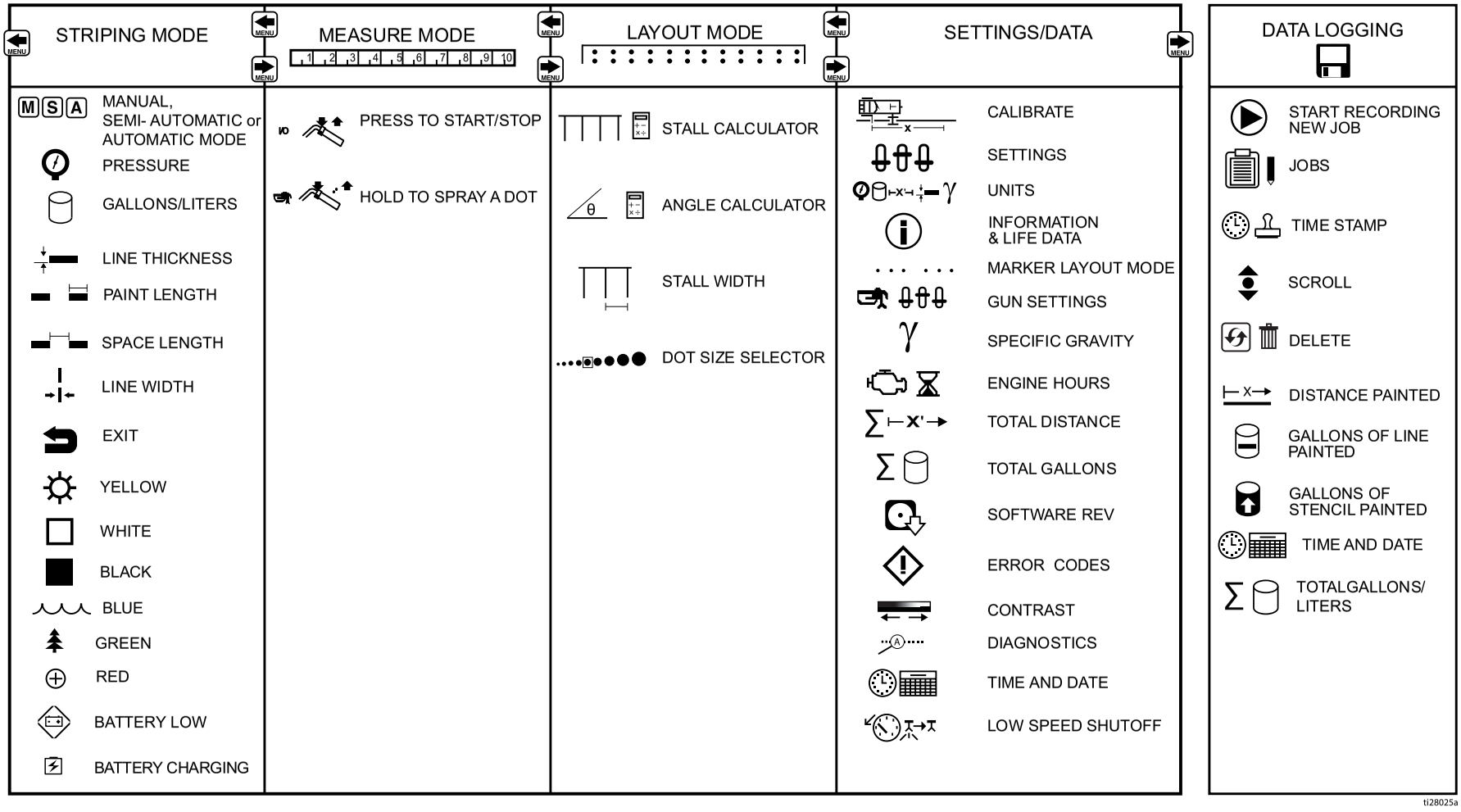

Technical Specifications

LineLazer V 200HS Standard Series (Models 17H459, 17H461)		
	U.S.	**Metric**
Dimensions		
Height (with handle bar down)	Unpackaged - 44.5 in. Packaged - 52.5 in.	Unpackaged - 113.03 cm Packaged - 133.35 cm
Width	Unpackaged - 34.25 in. Packaged - 37.0 in.	Unpackaged - 87.0 cm Packaged - 93.98 cm
Length (with platform down)	Unpackaged - 68.75 in. Packaged - 73.5 in.	Unpackaged - 174.63 cm Packaged - 186.69 cm
Weight (dry - no paint)	Unpackaged - 306 lbs Packaged - 373 lbs	Unpackaged - 139 kg Packaged - 169 kg
Noise (dBa)		
Sound Power per ISO 3744:	103.1	
Sound Pressure measured at 3.3 feet (1m):	86.5	
Vibration (m/s^2) (8 hours daily exposure)		
Hand Arm (per ISO 5349)	1.6	
Whole Body (per ISO 2631)	0.4	
Power Rating (Horse Power)		
Power Rating (Horse Power) per SAE J1349	6.5 HP @ 3600 rpm	4.84 kW @ 3600 rpm
Maximum Delivery	2.15 gpm	8.14 lpm
Maximum Tip Size 1 gun 2 gun	 .047 .034	
Inlet paint strainer	16 mesh	1190 micron
Outlet paint strainer	50 mesh	297 micron
Pump inlet size	1 in. NSPM (m)	
Pump outlet size	3/8 NPT (f)	
Maximum working pressure	3300 psi	228 bar, 22.8 MPa
Maximum fluid working pressure	3300 psi	228 bar, 22.8 MPa
Maximum free-flow delivery	2.15 gpm	8.14 lpm
Cycles per gallon/liter	62 cpg	16.4 cpl
Hydraulic reservoir capacity	1.25 gallons	4.73 liters
Hydraulic pressure	1825 psi	124 bar
Electrical Capacity	84 W @ 3800 rpm	
Battery	12V, 22Ah, Sealed lead acid, Deep cycle	

Wetted Parts: PTFE, Nylon, polyurethane, V-Max, UHMWPE, fluoroelastomer, acetal, leather, tungsten carbide, stainless steel, chrome plating, nickel-plated carbon steel, ceramic

LineLazer V 200HS HP Auto Series (Models 17K582, 17H462, 17K637, 17H463,17K583, 17H464)		
	U.S.	**Metric**
Dimensions		
Height (with handle bar down)	Unpackaged - 44.5 in. Packaged - 52.5 in.	Unpackaged - 113.03 cm Packaged - 133.35 cm
Width	Unpackaged - 34.25 in. Packaged - 37.0 in.	Unpackaged - 87.0 cm Packaged - 93.98 cm
Length (with platform down)	Unpackaged - 68.75 in. Packaged - 73.5 in.	Unpackaged - 174.63 cm Packaged - 186.69 cm
Weight (dry - no paint)	Unpackaged - 322 lbs Packaged - 389 lbs	Unpackaged - 146 kg Packaged - 176 kg
Noise (dBa)		
Sound Power per ISO 3744:	103.1	
Sound Pressure measured at 3.3 feet (1m):	86.5	
Vibration (m/s^2) (8 hours daily exposure)		
Hand Arm (per ISO 5349)	1.6	
Whole Body (per ISO 2631)	0.4	
Power Rating (Horse Power)		
Power Rating (Horse Power) per SAE J1349	6.5 HP @ 3600 rpm	4.84 kW @ 3600 rpm
Maximum Delivery	2.15 gpm	8.14 lpm
Maximum Tip Size 1 gun 2 gun	 .047 .034	
Inlet paint strainer	16 mesh	1190 micron
Outlet paint strainer	50 mesh	297 micron
Pump inlet size	1 in. NSPM (m)	
Pump outlet size	3/8 NPT (f)	
Maximum working pressure	3300 psi	228 bar, 22.8 MPa
Maximum fluid working pressure	3300 psi	228 bar, 22.8 MPa
Maximum free-flow delivery	2.15 gpm	8.14 lpm
Cycles per gallon/liter	62 cpg	16.4 cpl
Hydraulic reservoir capacity	1.25 gallons	4.73 liters
Hydraulic pressure	1825 psi	124 bar
Electrical Capacity	84 W@ 3600 rpm	
Battery	12V, 22Ah, Sealed lead acid, Deep cycle	

Wetted Parts: PTFE, Nylon, polyurethane, V-Max, UHMWPE, fluoroelastomer, acetal, leather, tungsten carbide, stainless steel, chrome plating, nickel-plated carbon steel, ceramic

LineLazer V 200HS HP Reflective Series (Models 17H460, 17J964, 17K585, 17H465)		
	U.S.	**Metric**
Dimensions		
Height (with handle bar down)	Unpackaged - 44.5 in. Packaged - 52.5 in.	Unpackaged - 113.03 cm Packaged - 133.35 cm
Width	Unpackaged - 34.25 in. Packaged - 37.0 in.	Unpackaged - 87.0 cm Packaged - 93.98 cm
Length (with platform down)	Unpackaged - 68.75 in. Packaged - 73.5 in.	Unpackaged - 174.63 cm Packaged - 186.69 cm
Weight (dry - no paint)	Unpackaged - 417 lbs Packaged - 484 lbs	Unpackaged - 189 kg Packaged - 219kg
Noise (dBa)		
Sound Power per ISO 9614:	99.0	
Sound Pressure per ISO 9614:	85.5	
Vibration (m/s^2) (8 hours daily exposure)		
Hand Arm (per ISO 5349)	Left hand 1.71 Right hand 2.23	
Whole Body (per ISO 2631)	0.4	
Power Rating (Horse Power)		
Power Rating (Horse Power) per SAE J1349	6.5 HP @ 3600 rpm	4.84 kW @ 3600 rpm
Maximum Delivery	2.15 gpm	8.14 lpm
Maximum Tip Size 1 gun 2 gun	 .047 .034	
Inlet paint strainer	16 mesh	1190 micron
Outlet paint strainer	50 mesh	297 micron
Pump inlet size	1 in. NSPM (m)	
Pump outlet size	3/8 NPT (f)	
Maximum working pressure	3300 psi	228 bar, 22.8 MPa
Maximum fluid working pressure	3300 psi	228 bar, 22.8 MPa
Maximum free-flow delivery	2.15 gpm	8.14 lpm
Cycles per gallon/liter	62 cpg	16.4 cpl
Hydraulic reservoir capacity	1.25 gallons	4.73 liters
Hydraulic pressure	1825 psi	124 bar
Electrical Capacity	84 W@ 3600 rpm	
Battery	12V, 22Ah, Sealed lead acid, Deep cycle	

Wetted Parts: PTFE, Nylon, polyurethane, V-Max, UHMWPE, fluoroelastomer, acetal, leather, tungsten carbide, stainless steel, chrome plating, nickel-plated carbon steel, ceramic

LineLazer V 200DC Standard Series (Model 17Y231)		
	U.S.	**Metric**
Dimensions		
Height (with handle bar down)	Unpackaged - 44.5 in. Packaged - 52.5 in.	Unpackaged - 113.03 cm Packaged - 133.35 cm
Width	Unpackaged - 34.25 in. Packaged - 37.0 in.	Unpackaged - 87.0 cm Packaged - 93.98 cm
Length (with platform down)	Unpackaged - 68.75 in. Packaged - 73.5 in.	Unpackaged - 174.63 cm Packaged - 186.69 cm
Weight (dry - no paint)	Unpackaged - 411 lbs Packaged - 477 lbs	Unpackaged - 186 kg Packaged - 216 kg
Noise (dBa)		
Sound Power per ISO 9614:	99.0	
Sound Pressure per ISO 9614:	85.5	
Vibration (m/s^2) (8 hours daily exposure)		
Hand Arm (per ISO 5349)	Left hand 1.71 Right hand 2.23	
Whole Body (per ISO 2631)	0.4	
Power Rating (Horse Power)		
Power Rating (Horse Power) per SAE J1349	6.5 HP @ 3600 rpm	4.84 kW @ 3600 rpm
Maximum Delivery	2.15 gpm	8.14 lpm
Maximum Tip Size 1 gun 2 gun	 .047 .034	
Inlet paint strainer	16 mesh	1190 micron
Outlet paint strainer	50 mesh	297 micron
Pump inlet size	1 in. NSPM (m)	
Pump outlet size	3/8 NPT (f)	
Maximum working pressure	3300 psi	228 bar, 22.8 MPa
Maximum fluid working pressure	3300 psi	228 bar, 22.8 MPa
Maximum free-flow delivery	2.15 gpm	8.14 lpm
Cycles per gallon/liter	62 cpg	16.4 cpl
Hydraulic reservoir capacity	1.25 gallons	4.73 liters
Hydraulic pressure	1825 psi	124 bar
Electrical Capacity	84 W@ 3600 rpm	
Battery	12V, 22Ah, Sealed lead acid, Deep cycle	

Wetted Parts: PTFE, Nylon, polyurethane, V-Max, UHMWPE, fluoroelastomer, acetal, leather, tungsten carbide, stainless steel, chrome plating, nickel-plated carbon steel, ceramic

LineLazer V 200DC Standard Reflective Series (Models 17Y648)		
	U.S.	**Metric**
Dimensions		
Height (with handle bar down)	Unpackaged - 44.5 in. Packaged - 52.5 in.	Unpackaged - 113.03 cm Packaged - 133.35 cm
Width	Unpackaged - 34.25 in. Packaged - 37.0 in.	Unpackaged - 87.0 cm Packaged - 93.98 cm
Length (with platform down)	Unpackaged - 68.75 in. Packaged - 73.5 in.	Unpackaged - 174.63 cm Packaged - 186.69 cm
Weight (dry - no paint)	Unpackaged - 506 lbs Packaged - 573 lbs	Unpackaged - 230 kg Packaged - 260 kg
Noise (dBa)		
Sound Power per ISO 9614:	99.0	
Sound Pressure per ISO 9614:	85.5	
Vibration (m/s^2) (8 hours daily exposure)		
Hand Arm (per ISO 5349)	Left hand 1.71 Right hand 2.23	
Whole Body (per ISO 2631)	0.4	
Power Rating (Horse Power)		
Power Rating (Horse Power) per SAE J1349	6.5 HP @ 3600 rpm	4.84 kW @ 3600 rpm
Maximum Delivery	2.15 gpm	8.14 lpm
Maximum Tip Size 1 gun 2 gun	 .047 .034	
Inlet paint strainer	16 mesh	1190 micron
Outlet paint strainer	50 mesh	297 micron
Pump inlet size	1 in. NSPM (m)	
Pump outlet size	3/8 NPT (f)	
Maximum working pressure	3300 psi	228 bar, 22.8 MPa
Maximum fluid working pressure	3300 psi	228 bar, 22.8 MPa
Maximum free-flow delivery	2.15 gpm	8.14 lpm
Cycles per gallon/liter	62 cpg	16.4 cpl
Hydraulic reservoir capacity	1.25 gallons	4.73 liters
Hydraulic pressure	1825 psi	124 bar
Electrical Capacity	84 W@ 3600 rpm	
Battery	12V, 22Ah, Sealed lead acid, Deep cycle	

Wetted Parts: PTFE, Nylon, polyurethane, V-Max, UHMWPE, fluoroelastomer, acetal, leather, tungsten carbide, stainless steel, chrome plating, nickel-plated carbon steel, ceramic

LineLazer V 200DC HP Auto Series (Models 17Y232, 17Y269)		
	U.S.	**Metric**
Dimensions		
Height (with handle bar down)	Unpackaged - 44.5 in. Packaged - 52.5 in.	Unpackaged - 113.03 cm Packaged - 133.35 cm
Width	Unpackaged - 34.25 in. Packaged - 37.0 in.	Unpackaged - 87.0 cm Packaged - 93.98 cm
Length (with platform down)	Unpackaged - 68.75 in. Packaged - 73.5 in.	Unpackaged - 174.63 cm Packaged - 186.69 cm
Weight (dry - no paint)	Unpackaged - 427 lbs Packaged - 494 lbs	Unpackaged - 194 kg Packaged - 224 kg
Noise (dBa)		
Sound Power per ISO 9614:	99.0	
Sound Pressure per ISO 9614:	85.5	
Vibration (m/s^2) (8 hours daily exposure)		
Hand Arm (per ISO 5349)	Left hand 1.71 Right hand 2.23	
Whole Body (per ISO 2631)	0.4	
Power Rating (Horse Power)		
Power Rating (Horse Power) per SAE J1349	6.5 HP @ 3600 rpm	4.84 kW @ 3600 rpm
Maximum Delivery	2.15 gpm	8.14 lpm
Maximum Tip Size 1 gun 2 gun	 .047 .034	
Inlet paint strainer	16 mesh	1190 micron
Outlet paint strainer	50 mesh	297 micron
Pump inlet size	1 in. NSPM (m)	
Pump outlet size	3/8 NPT (f)	
Maximum working pressure	3300 psi	228 bar, 22.8 MPa
Maximum fluid working pressure	3300 psi	228 bar, 22.8 MPa
Maximum free-flow delivery	2.15 gpm	8.14 lpm
Cycles per gallon/liter	62 cpg	16.4 cpl
Hydraulic reservoir capacity	1.25 gallons	4.73 liters
Hydraulic pressure	1825 psi	124 bar
Electrical Capacity	84 W@ 3600 rpm	
Battery	12V, 22Ah, Sealed lead acid, Deep cycle	

Wetted Parts: PTFE, Nylon, polyurethane, V-Max, UHMWPE, fluoroelastomer, acetal, leather, tungsten carbide, stainless steel, chrome plating, nickel-plated carbon steel, ceramic

LineLazer V 200DC HP Reflective Series (Models 17Y233, 17Y270)		
	U.S.	**Metric**
Dimensions		
Height (with handle bar down)	Unpackaged - 44.5 in. Packaged - 52.5 in.	Unpackaged - 113.03 cm Packaged - 133.35 cm
Width	Unpackaged - 34.25 in. Packaged - 37.0 in.	Unpackaged - 87.0 cm Packaged - 93.98 cm
Length (with platform down)	Unpackaged - 68.75 in. Packaged - 73.5 in.	Unpackaged - 174.63 cm Packaged - 186.69 cm
Weight (dry - no paint)	Unpackaged - 522 lbs Packaged - 589 lbs	Unpackaged - 237 kg Packaged - 267 kg
Noise (dBa)		
Sound Power per ISO 9614:	99.0	
Sound Pressure per ISO 9614:	85.5	
Vibration (m/s^2) (8 hours daily exposure)		
Hand Arm (per ISO 5349)	Left hand 1.71 Right hand 2.23	
Whole Body (per ISO 2631)	0.4	
Power Rating (Horse Power)		
Power Rating (Horse Power) per SAE J1349	6.5 HP @ 3600 rpm	4.84 kW @ 3600 rpm
Maximum Delivery	2.15 gpm	8.14 lpm
Maximum Tip Size 1 gun 2 gun	 .047 .034	
Inlet paint strainer	16 mesh	1190 micron
Outlet paint strainer	50 mesh	297 micron
Pump inlet size	1 in. NSPM (m)	
Pump outlet size	3/8 NPT (f)	
Maximum working pressure	3300 psi	228 bar, 22.8 MPa
Maximum fluid working pressure	3300 psi	228 bar, 22.8 MPa
Maximum free-flow delivery	2.15 gpm	8.14 lpm
Cycles per gallon/liter	62 cpg	16.4 cpl
Hydraulic reservoir capacity	1.25 gallons	4.73 liters
Hydraulic pressure	1825 psi	124 bar
Electrical Capacity	84 W@ 3600 rpm	
Battery	12V, 22Ah, Sealed lead acid, Deep cycle	

Wetted Parts: PTFE, Nylon, polyurethane, V-Max, UHMWPE, fluoroelastomer, acetal, leather, tungsten carbide, stainless steel, chrome plating, nickel-plated carbon steel, ceramic

CALIFORNIA PROPOSITION 65

WARNING: This product can expose you to chemicals known to the State of California to cause cancer and birth defects or other reproductive harm. For more information go to www.P65Warnings.ca.gov.

Graco Standard Warranty

Graco warrants all equipment referenced in this document which is manufactured by Graco and bearing its name to be free from defects in material and workmanship on the date of sale to the original purchaser for use. With the exception of any special, extended, or limited warranty published by Graco, Graco will, for a period of twelve months from the date of sale, repair or replace any part of the equipment determined by Graco to be defective. This warranty applies only when the equipment is installed, operated and maintained in accordance with Graco's written recommendations.

This warranty does not cover, and Graco shall not be liable for general wear and tear, or any malfunction, damage or wear caused by faulty installation, misapplication, abrasion, corrosion, inadequate or improper maintenance, negligence, accident, tampering, or substitution of non-Graco component parts. Nor shall Graco be liable for malfunction, damage or wear caused by the incompatibility of Graco equipment with structures, accessories, equipment or materials not supplied by Graco, or the improper design, manufacture, installation, operation or maintenance of structures, accessories, equipment or materials not supplied by Graco.

This warranty is conditioned upon the prepaid return of the equipment claimed to be defective to an authorized Graco distributor for verification of the claimed defect. If the claimed defect is verified, Graco will repair or replace free of charge any defective parts. The equipment will be returned to the original purchaser transportation prepaid. If inspection of the equipment does not disclose any defect in material or workmanship, repairs will be made at a reasonable charge, which charges may include the costs of parts, labor, and transportation.

THIS WARRANTY IS EXCLUSIVE, AND IS IN LIEU OF ANY OTHER WARRANTIES, EXPRESS OR IMPLIED, INCLUDING BUT NOT LIMITED TO WARRANTY OF MERCHANTABILITY OR WARRANTY OF FITNESS FOR A PARTICULAR PURPOSE.

Graco's sole obligation and buyer's sole remedy for any breach of warranty shall be as set forth above. The buyer agrees that no other remedy (including, but not limited to, incidental or consequential damages for lost profits, lost sales, injury to person or property, or any other incidental or consequential loss) shall be available. Any action for breach of warranty must be brought within two (2) years of the date of sale.

GRACO MAKES NO WARRANTY, AND DISCLAIMS ALL IMPLIED WARRANTIES OF MERCHANTABILITY AND FITNESS FOR A PARTICULAR PURPOSE, IN CONNECTION WITH ACCESSORIES, EQUIPMENT, MATERIALS OR COMPONENTS SOLD BUT NOT MANUFACTURED BY GRACO. These items sold, but not manufactured by Graco (such as electric motors, switches, hose, etc.), are subject to the warranty, if any, of their manufacturer. Graco will provide purchaser with reasonable assistance in making any claim for breach of these warranties.

In no event will Graco be liable for indirect, incidental, special or consequential damages resulting from Graco supplying equipment hereunder, or the furnishing, performance, or use of any products or other goods sold hereto, whether due to a breach of contract, breach of warranty, the negligence of Graco, or otherwise.

FOR GRACO CANADA CUSTOMERS

The Parties acknowledge that they have required that the present document, as well as all documents, notices and legal proceedings entered into, given or instituted pursuant hereto or relating directly or indirectly hereto, be drawn up in English. Les parties reconnaissent avoir convenu que la rédaction du présente document sera en Anglais, ainsi que tous documents, avis et procédures judiciaires exécutés, donnés ou intentés, à la suite de ou en rapport, directement ou indirectement, avec les procédures concernées.

Graco Information

For the latest information about Graco products, visit www.graco.com.
For patent information, see www.graco.com/patents.
TO PLACE AN ORDER, contact your Graco distributor or call 1-800-690-2894 to identify the nearest distributor.

All written and visual data contained in this document reflects the latest product information available at the time of publication.
Graco reserves the right to make changes at any time without notice.

Original instructions. This manual contains English. MM 3A3426
Graco Headquarters: Minneapolis
International Offices: Belgium, China, Japan, Korea

GRACO INC. AND SUBSIDIARIES • P.O. BOX 1441 • MINNEAPOLIS MN 55440-1441 • USA
Copyright 2018, Graco Inc. All Graco manufacturing locations are registered to ISO 9001.

www.graco.com
Revision J, May 2024